TRANSPORTATION CABINET
Frankfort, Kentucky 40622
www.transportation.ky.gov/

Steven L. Beshear
Governor

Michael W. Hancock, P.E.
Secretary

June 4, 2013

CALL NO. 100
CONTRACT ID NO. 131037
ADDENDUM # 2

Subject: Jefferson County, TIP-STPE 0163 (035)
Letting June 7, 2013

(1)Revised - Plan Sheets
(2)Added - Questions & Answers - Pages 14(a)-14(j) of 794
(3)Revised - Table of Contents - Pages 17-18 of 794
(4)Added - SBS Modified Bitumen Cold Applied Membrane Roofing
Pages 387(a)- 387(m) of 794
(5)Added - Lightning Protection System - Pages 600(a)-600(c) of 794

Proposal revisions are available at http://transportation.ky.gov/Construction-Procurement/.

Plan revisions are available at http://www.lynnimaging.com/kytransportation/.

If you have any questions, please contact us at 502-564-3500.

Sincerely,

Ryan Griffith

Ryan Griffith
Acting Director
Division of Construction Procurement
RG:ks
Enclosures



PARTIAL SITE PLAN BIG VISTA - ELECTRICAL

SCALE: 1" = 200'

1 UE105

SITE UTILITIES PLAN (GENERAL NOTES):

- DO NOT SCALE FROM MECHANICAL OR ELECTRICAL DRAWINGS. FIELD VERIFY REQUIRED DIMENSIONS.
- REFER TO ALL OTHER PLANS AND SPECIFICATIONS, BUT ESPECIALLY TO:
  - A) THE SITE SURVEY
  - B) THE ARCHITECTURAL SITE PLAN
  - C) THE SITE GRADING PLAN
  - D) THE PLANTING PLAN (WHERE AVAILABLE)
  - E) FOUNDATION PLAN(S)
  - F) APPROPRIATE MECHANICAL & ELECTRICAL FLOOR PLANS FOR SERVICE CONTINUATIONS
  - G) THE SITE UTILITY PLAN – MECHANICAL

  WHERE THERE ARE CONFLICTS AMONG PLANS AND/OR RELATED SPECIFICATIONS, ADVISE ENGINEER AT LEAST TWELVE DAYS PRIOR TO SUBMISSION OF BIDS.
- ALL FEES AND ANY OTHER COSTS TO UTILITY COMPANIES, MUNICIPALITIES, INSPECTORS, REVIEWING AGENCIES, ETC. ARE TO BE INCLUDED AS A PART OF THIS CONTRACT.
- CONTRACTOR SHALL CUT AND PATCH ALL PAVEMENT, CURBING, ETC. AS REQUIRED, FOR WORK. CONTRACTOR SHALL REPAIR ALL LANDSCAPING THAT IS DAMAGED FOR WORK.
- FEDERAL, STATE, LOCAL, MUNICIPALITY AND UTILITY COMPANY CODES, RULES, REGULATIONS AND REQUIREMENTS APPLY UNLESS EXCEEDED BY THIS DESIGN.
- WHEN INTERRUPTION OF AN EXISTING UTILITY OR SERVICES IS PLANNED OR OCCURS ACCIDENTALLY, THE CONTRACTOR(S) SHALL WORK CONTINUOUSLY AS NEEDED TO RESTORE SAME PROVIDING PREMIUM TIME AS NEEDED AT NO INCREASE IN THE CONTRACT PRICE.
- PLANNED INTERRUPTION OF ANY SERVICE SHALL BE COORDINATED WITH THE APPROPRIATE MUNICIPALITY OR UTILITY COMPANY. THE ARCHITECT AND THE BUILDING OPERATORS AT LEAST ONE WEEK IN ADVANCE OF ANTICIPATED INTERRUPTION. A SCHEDULE FOR THESE OUTAGES SHALL BE DEVELOPED AND AGREED UPON BETWEEN THE PARTIES MENTIONED TO AVOID UNNECESSARY INCONVENIENCE TO THE OWNER OR ANY AFFECTED PARTY. NOTIFY THE UTILITY COMPANY OF ANY ANTICIPATED SERVICES REQUIRED FROM THEM AT LEAST TWO WEEKS IN ADVANCE IN WRITING AND INSURE THAT THEY DO NOT DELAY WORK.
- LOCATIONS, DEPTHS, MATERIAL TYPES, ELEVATIONS, ETC. OF ALL APPURTENANCES, LINES, BUILDINGS, ETC. INDICATED ON THESE DRAWINGS WERE TAKE FROM VARIOUS SOURCES, ARE DIAGRAMMATIC ONLY AND ARE SUBJECT TO SUBSTANTIAL VARIATION FROM EXISTING CONDITIONS. EXISTING UTILITIES LOCATIONS MAY VARY (CONSEQUENTLY ALL CONTRACTORS SHALL EXERCISE EXTREME CARE IN THE COURSE OF THEIR WORK SO AS INSURE THAT THEY DO NOT INTERRUPT ANY EXISTING SERVICE. FOR SAFETY PURPOSES, PAY PARTICULAR ATTENTION TO THIS PRECAUTION RELATIVE TO NATURAL GAS AND ELECTRICAL LINES. ALL WORK SHALL BE PERFORMED IN ACCORD WITH ALL FEDERAL, STATE, AND/OR LOCAL RULES, REGULATIONS, STANDARDS AND SAFETY REQUIREMENTS. UTILITIES SHALL ALSO BE INSTALLED IN ACCORD WITH THE APPLICABLE MUNICIPALITY OR UTILITY COMPANY STANDARDS. IN ALL CASES, THE MOST STRINGENT REQUIREMENT SHALL APPLY. IF ANY VARIATION OCCURS, CONSULT THE BUILDING ENGINEER AND THE ELECTRICAL/MECHANICAL ENGINEER'S REPRESENTATIVE). CONTRACTOR SHALL VISIT SITE AND FIELD VERIFY THE ROUTING OF ALL UTILITIES NEW AND EXISTING PRIOR TO SUBMISSION OF BIDS. SUBMISSION OF A BID PROPOSAL INDICATES THAT THE CONTRACTOR IS FULLY AWARE OF ALL OBSTRUCTIONS AND WILL INSTALL ALL OF THE NEW UTILITIES WITHOUT REQUESTS FOR ANY ADDITIONAL CHANGES.
- CONTRACTOR SHALL PATCH AND REPAIR ALL LANDSCAPING THAT IS DISTURBED BY WORK OCCURRING IN THIS PROJECT AS REQUIRED.

PROTECTION OF TREES IS CRITICALLY IMPORTANT WITHIN ALL AREAS OF THE WORK. PRIOR TO ANY CLEARING, THE "LIMITS OF DISTURBANCE" FOR CONSTRUCTION OF ALL BUILDINGS, ARCHITECTURAL FEATURES, PLAZAS, AND UNDERGROUND UTILITIES SHALL BE STAKED BY THE CONTRACTOR, AND THE STAKED ALIGNMENTS SHALL BE REVIEWED BY THE OWNER'S DESIGNATED TREE PROTECTION REPRESENTATIVE. NO CLEARING OR CONSTRUCTION ACTIVITY SHALL OCCUR UNTIL THE AREAS TO BE DISTURBED ARE STAKED, REVIEWED AND APPROVED BY THE OWNER'S REPRESENTATIVE. CLEARING SHALL BE MINIMIZED AND STRICTLY LIMITED TO THE STAKED AND APPROVED AREAS OF DISTURBANCE. DURING CONSTRUCTION, THE CONTRACTOR SHALL AVOID USING ANY UNCLEARED WOODED AREAS OUTSIDE OF THE APPROVED AREAS OF DISTURBANCE FOR ACCESS, MATERIAL STORAGE OR PARKING.

POWER RISER TAGGED NOTES :

1. LG&E LEASED LIGHT.

ELECTRICAL SITE UTILITIES LINE LEGEND

	EXISTING	DEMOLITION	NEW
OVERHEAD	(E)OH	(E)OH	OH
UNDERGROUND	(E)UG	(E)UG	UG
POWER POLE	(E)PP	(E)PP	PP
SITE LIGHTS			
ELECTRIC	ELEC		
TELEPHONE	TEL		
CABLE TV	CATV		

THE CONTRACTOR AND ALL SUBCONTRACTORS SHALL CONTACT "BUD (BEFORE YOU DIG)" AT 811 OR 1-800-752-6007 TO OBTAIN UNDERGROUND UTILITY LOCATIONS PRIOR TO ANY CONSTRUCTION. ANY CONTRACTOR OR SUBCONTRACTOR PERFORMING ANY TYPE OF EXCAVATION ON THIS PROJECT SHALL CALL "BUD" TO OBTAIN AN AUTHORIZATION NUMBER.

CMTA CONTACT LIST:

BRIAN BAUMGARTLE	(502) 326-3085

STATE OF KENTUCKY
BRIAN K. BAUMGARTLE
23159
LICENSED
PROFESSIONAL ENGINEER

Architecture
Engineering
Planning
815 West Market Street, Suite 300, Louisville, Kentucky 40202
Phone: 502.584.1722 Fax: 502.584.1723 www.q4a.com
Kentucky • Indiana • Georgia • West Virginia • Tennessee • Florida

MEP ENGINEERING CONSULTANTS
10411 Meeting Street
Prospect, Kentucky 40059
502 / 292-0661 FAX 292-0691
www.cmtaengrs.com

Architect
BRAVURA
111 West Washington Street
Louisville, Kentucky 40202
T: (502) 584-9900
F: (502) 584-0829

The Parklands of Floyds Fork, Project 4A

The Strand, Turkey Run Park and Broad Run Park
Louisville, Kentucky

Owner:
21st Century Parks, Inc.
371 W. Main St., Suite 202
Louisville, Kentucky 40202

REV #	DATE	DESCRIPTION
	05/09/2013	ISSUED FOR BID
2	05/30/2013	ADDENDUM #2: REVISED INFORMATION AT ROAD INTERSECTION

Job No: 155-617
Date: May 30, 2013
Scale: As Shown
Drawn By:
ISSUED FOR ADDENDUM #2

Drawing Title:
Parklands of Floyds Fork

PROJECT 4A
Big Vista
Partial Site Plan
Electrical

Drawing No:
UE-105

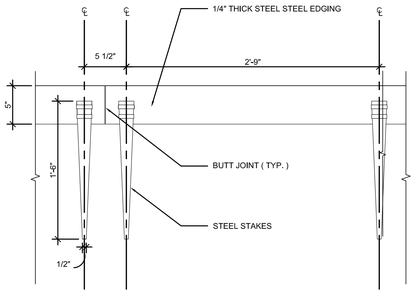

STEEL EDGING - ELEVATION

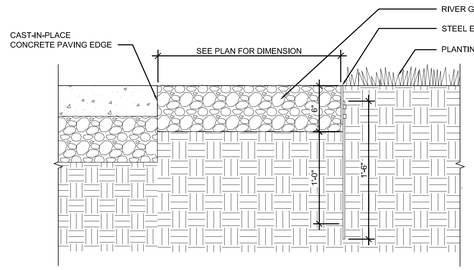

STEEL EDGEING AT DRAINAGE GRAVEL - SECTION

DRAINAGE GRAVEL AREA

SCALE: 1 1/2" = 1'-0"

2 SP1-101

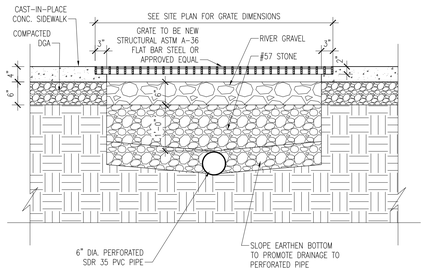

DRAINAGE GRATE - SECTION

SCALE: 3/4" = 1'-0"

3 SP5-101

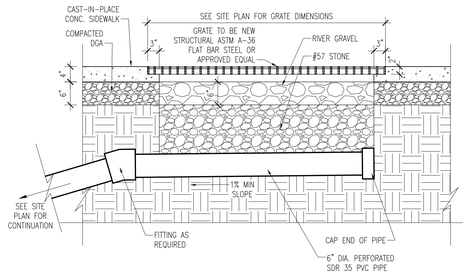

DRAINAGE GRATE - SECTION

SCALE: 3/4" = 1'-0"

4 SP5-101

GENERAL NOTES

1. REFER TO CIVIL DRAWINGS FOR TRAIL, ROAD AND LOOP ALIGNMENTS BEYOND WHAT IS SHOWN.

2. UNLESS OTHERWISE NOTED ON THESE DRAWINGS, REFER TO CIVIL DRAWINGS FOR SPOT ELEVATIONS & SITE GRADING.

3. SEAT WALLS AND ROCK FENCE DIMENSIONS ARE TAKEN AT THE CENTERLINE OF THE WALL ARC.

4. PROTECTION OF TREES IS CRITICALLY IMPORTANT WITHIN ALL AREAS OF THE WORK. PRIOR TO ANY CLEARING, THE "LIMITS OF DISTURBANCE" FOR CONSTRUCTION OF ALL BUILDINGS, ARCHITECTURAL FEATURES, PLAZAS, AND UNDERGROUND UTILITIES SHALL BE STAKED BY THE CONTRACTOR, AND THE STAKED ALIGNMENTS SHALL BE REVIEWED BY THE OWNER'S DESIGNATED TREE PROTECTION REPRESENTATIVE. NO CLEARING OR CONSTRUCTION ACTIVITY SHALL OCCUR UNTIL THE AREAS TO BE DISTURBED ARE STAKED, REVIEWED AND APPROVED BY THE OWNER'S REPRESENTATIVE. CLEARING SHALL BE MINIMIZED AND STRICTLY LIMITED TO THE STAKED AND APPROVED AREAS OF DISTURBANCE. DURING CONSTRUCTION, THE CONTRACTOR SHALL AVOID USING ANY UNCLEARED WOODED AREAS OUTSIDE OF THE APPROVED AREAS OF DISTURBANCE FOR ACCESS, MATERIAL STORAGE OR PARKING.

KEY NOTES

- A SEAT WALL, SEE DETAILS 2&3/A7-301
- B PLANTATION ERA ROCK FENCE, SEE DETAILS 1&8/A7-301
- C CONTROL JOINT, SEE DETAIL 7/A7-301
- D EXPANSION JOINT, SEE DETAIL 6/A7-301
- E LOUISVILLE LOOP, SEE CIVIL DRAWINGS FOR LAYOUT AND DETAILS
- F ADA DETECTABLE WARNING PAVERS, SEE DETAILS 4&5/A7-301
- G EXCURSION TRAIL – SEE CIVIL DRAWINGS FOR LAYOUT AND DETAILS
- H C.I.P. CONCRETE PEDESTRIAN WALK, SEE DETAIL 9/A7-301
- I BOLLAROS/FENCES/GATES, SEE DRAWING SUBSET A8-100 FOR DETAILS & LAYOUT
- J CULVERT, SEE CIVIL DRAWINGS FOR LAYOUT AND DETAILS
- K BRIDGE, SEE CIVIL DRAWINGS FOR LAYOUT AND DETAILS
- L ROAD STRIPPING, SEE CIVIL DRAWINGS AND SPECIFICATIONS FOR DETAILS
- M PARKING LOT, SEE CIVIL DRAWINGS FOR LAYOUT AND DETAILS
- N TRAILHEAD SIGNAGE, SEE DETAILS 11,12,13/A7-301
- O LATERAL FIELD, SEE CIVIL DRAWINGS FOR LAYOUT AND DETAILS
- P 4 RAIL FENCE & GATE, SEE SUBSET A8-100 FOR DETAILS & LAYOUT
- Q RETAINING WALL, SEE CIVIL DRAWINGS FOR LAYOUT AND DETAILS
- R UTILITY LINES, SEE CIVIL DRAWINGS FOR LAYOUT NO DETAILS
- S LIMESTONE BENCH – SEE DETAIL 10/A7-301
- T BIKE RACK, N.I.C.
- U TRASH CAN, N.I.C.
- V BENCH, N.I.C.
- W PICNIC TABLE, N.I.C.
- X LIGHT BOLLARD, SEE ELECTRICAL DRAWINGS FOR FIXTURE TYPE AND DETAILS

SITE PLAN-SEATON VALLEY TRAILHEAD PLAZA

SCALE: 1" = 10'-0"

1 SP5-101

JAMES J. WALTON
REGISTERED
NO. 29
SCOTT WALTON
LICENSED
LANDSCAPE
ARCHITECT

Architecture
Engineering
Planning

815 West Market Street, Suite 300 Louisville, Kentucky 40202
Phone: 502-585-2222 Facsimile: 502-992-0905 Internet: www.qk4.com
Kentucky · Indiana · Georgia · West Virginia · Tennessee · Florida

LANDSCAPE ARCHITECT
WRT
Wallace Roberts & Todd, LLC
1700 Market Street
28th Floor
Philadelphia, PA 19103
tel 215.732.5215
fax 215.732.2551

Architect
BRAVURA
111 West Washington Street
Louisville, Kentucky 40202
T: (502) 584-0400
F: (502) 584-0829

The Parklands of Floyds Fork, Project 4A
The Strand, Turkey Run Park and Broad Run Park
Louisville, Kentucky

Owner:
21st Century Parks, Inc.
371 W. Main St., Suite 202
Louisville, Kentucky 40202

REV #	DATE	DESCRIPTION
	4/5/2013	ISSUED FOR IBD
1	5/23/2013	ADDENDUM #2: ADDED DRAINAGE GRATE DETAIL

Job No:	155-617
Date:	May 30, 2013
Scale:	As Shown
Drawn By:	

ISSUED FOR ADDENDUM #2

Drawing Title:

Parklands of Floyds Fork

PROJECT 4A
Seaton Valley Trailhead Site Plan

Drawing No:

SP5-101

May. 29, 2013 – 8:48pm
Z:\Drawings\KY155-Floyds Fork\KY155-617 Project 4\Structures\SP1-101-SP5-101 – Trailhead Site Plans.dwg (SP5-101-Seaton Valley)

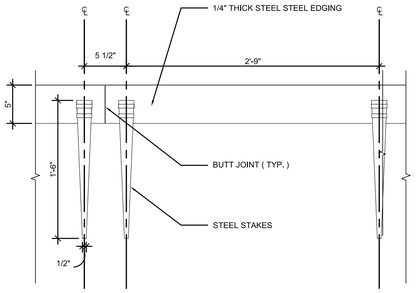

STEEL EDGING - ELEVATION

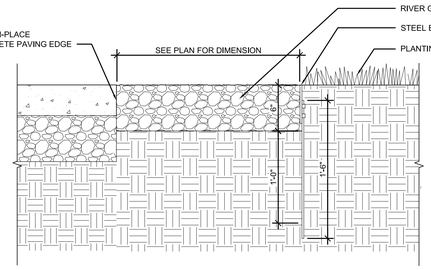

STEEL EDGEING AT DRAINAGE GRAVEL - SECTION

DRAINAGE GRAVEL AREA

SCALE: 1 1/2" = 1'-0"

2 / SP1-101

GENERAL NOTES

1. REFER TO CIVIL DRAWINGS FOR TRAIL, ROAD AND LOOP ALIGNMENTS BEYOND WHAT IS SHOWN.

2. UNLESS OTHERWISE NOTED ON THESE DRAWINGS, REFER TO CIVIL DRAWINGS FOR SPOT ELEVATIONS & SITE GRADING.

3. SEAT WALLS AND ROCK FENCE DIMENSIONS ARE TAKEN AT THE CENTERLINE OF THE WALL ARC.

4. PROTECTION OF TREES IS CRITICALLY IMPORTANT WITHIN ALL AREAS OF THE WORK. PRIOR TO ANY CLEARING, THE "LIMITS OF DISTURBANCE" FOR CONSTRUCTION OF ALL BUILDINGS, ARCHITECTURAL FEATURES, PLAZAS, AND UNDERGROUND UTILITIES SHALL BE STAKED BY THE CONTRACTOR, AND THE STAKED ALIGNMENTS SHALL BE REVIEWED BY THE OWNER'S DESIGNATED TREE PROTECTION REPRESENTATIVE. NO CLEARING OR CONSTRUCTION ACTIVITY SHALL OCCUR UNTIL THE AREAS TO BE DISTURBED ARE STAKED, REVIEWED AND APPROVED BY THE OWNER'S REPRESENTATIVE. CLEARING SHALL BE MINIMIZED AND STRICTLY LIMITED TO THE STAKED AND APPROVED AREAS OF DISTURBANCE. DURING CONSTRUCTION, THE CONTRACTOR SHALL AVOID USING ANY UNCLEARED WOODED AREAS OUTSIDE OF THE APPROVED AREAS OF DISTURBANCE FOR ACCESS, MATERIAL STORAGE OR PARKING.

KEY NOTES

- A SEAT WALL, SEE DETAILS 2&3/A7-301
- B PLANTATION ERA ROCK FENCE, SEE DETAILS 1&8/A7-301
- C CONTROL JOINT, SEE DETAIL 7/A7-301
- D EXPANSION JOINT, SEE DETAIL 6/A7-301
- E LOUISVILLE LOOP, SEE CIVIL DRAWINGS FOR LAYOUT AND DETAILS
- F ADA DETECTABLE WARNING PAVERS, SEE DETAILS 4&5/A7-301
- G EXCURSION TRAIL – SEE CIVIL DRAWINGS FOR LAYOUT AND DETAILS
- H C.I.P. CONCRETE PEDESTRIAN WALK, SEE DETAIL 9/A7-301
- I BOLLARDS/FENCES/GATES, SEE DRAWING SUBSET A8-100 FOR DETAILS & LAYOUT
- J CULVERT, SEE CIVIL DRAWINGS FOR LAYOUT AND DETAILS
- K BRIDGE, SEE CIVIL DRAWINGS FOR LAYOUT AND DETAILS
- L ROAD STRIPPING, SEE CIVIL DRAWINGS AND SPECIFICATIONS FOR DETAILS
- M PARKING LOT, SEE CIVIL DRAWINGS FOR LAYOUT AND DETAILS
- N TRAILHEAD SIGNAGE, SEE DETAILS 11,12,13/A7-301
- O LATERAL FIELD, SEE CIVIL DRAWINGS FOR LAYOUT AND DETAILS
- P 4 RAIL FENCE & GATE, SEE SUBSET A8-100 FOR DETAILS & LAYOUT
- Q RETAINING WALL, SEE CIVIL DRAWINGS FOR LAYOUT AND DETAILS
- R UTILITY LINES, SEE CIVIL DRAWINGS FOR LAYOUT ND DETAILS
- S LIMESTONE BENCH – SEE DETAIL 10/A7-301
- T BIKE RACK, N.I.C.
- U TRASH CAN, N.I.C.
- V BENCH, N.I.C.
- W PICNIC TABLE, N.I.C.
- X LIGHT BOLLARD, SEE ELECTRICAL DRAWINGS FOR FIXTURE TYPE AND DETAILS

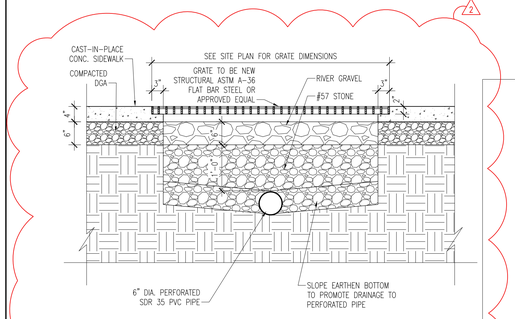

DRAINAGE GRATE - SECTION

SCALE: 3/4" = 1'-0"

3 / SP1-101

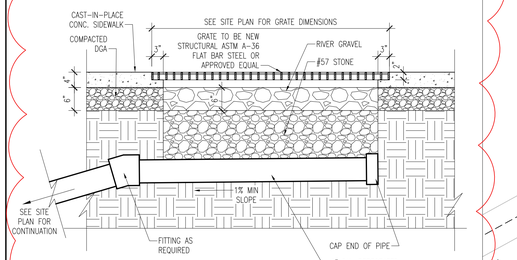

DRAINAGE GRATE - SECTION

SCALE: 3/4" = 1'-0"

4 / SP1-101



SITE PLAN - THE STRAND TRAILHEAD PLAZA

SCALE: 1" = 10'-0"

1 / SP1-101

JAMES J. WALTERSCHEID
REGISTERED
COMMONWEALTH OF KENTUCKY
LANDSCAPE ARCHITECT

Architecture
Engineering
Planning

815 West Market Street, Suite 200, Louisville, Kentucky 40202
Phone: (502) 584-6300 Fax: (502) 584-6307 www.qkpartners.com
Kentucky · Indiana · Georgia · West Virginia · Tennessee · Florida

LANDSCAPE ARCHITECT
Wallace Roberts & Todd, LLC
1700 Market Street
28th Floor
Philadelphia, PA 19103
tel 215.732.5215
fax 215.732.2551

Architect
BRAVURA
111 West Washington Street
Louisville, Kentucky 40202
T: (502) 584-9900
F: (502) 584-0829

The Parklands of Floyds Fork, Project 4A
The Strand, Turkey Run Park and Broad Run Park
Louisville, Kentucky

Owner:
21st Century Parks, Inc.
371 W. Main St., Suite 202
Louisville, Kentucky 40202

REV #	DATE	DESCRIPTION
	05/08/2013	ISSUED FOR BID
1	05/22/2013	ADDENDUM #1: REVISED TITLE TO READ "ADD-ALT. NO.2"
2	05/30/2013	ADDENDUM #2: ADDED DRAINAGE GRATE DETAIL

Job No:	155-617
Date:	May 30, 2013
Scale:	As Shown
Drawn By:	

ISSUED FOR ADDENDUM #2

Drawing Title:

1 Parklands of Floyds Fork

ADD-ALT. NO.2
PROJECT 4A
The Strand
2-Hole Trailhead
Site Plan

Drawing No:

SP1-101

May 29, 2013 - 8:44pm
Z:\Drawing\KY155-Floyds Fork\KY155-617 Project 4\Structures\SP1-101-SP5-101 - Trailhead Site Plans.dwg (SP1-101-Cornell)

GEOTECHNICAL NOTES:

REFER TO GEOTECHNICAL REPORT FOR ELEVATION OF SUBGRADE CONDITIONS AND REQUIREMENTS FOR RETAINING WALL DESIGN AND CONSTRUCTION.

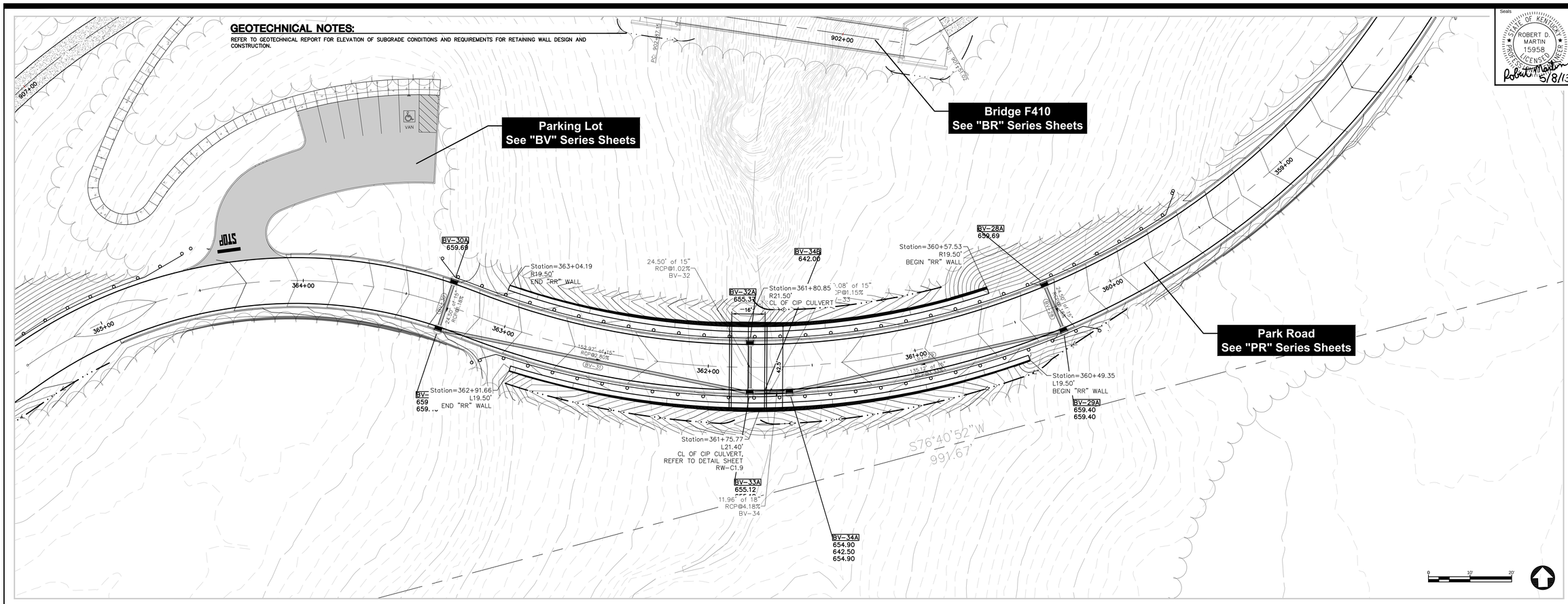

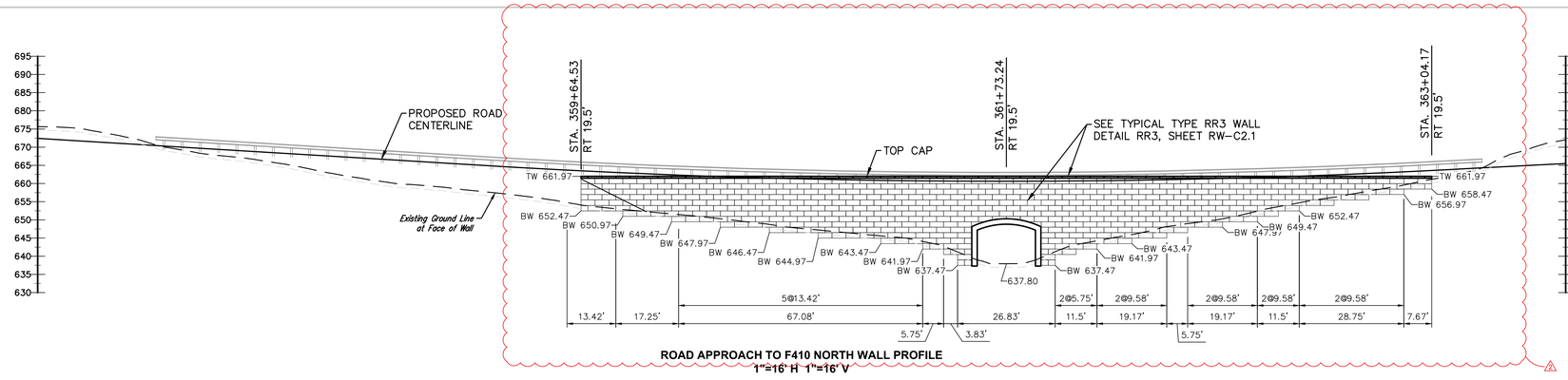

ROAD APPROACH TO F410 NORTH WALL PROFILE
1"=16' H 1"=16' V

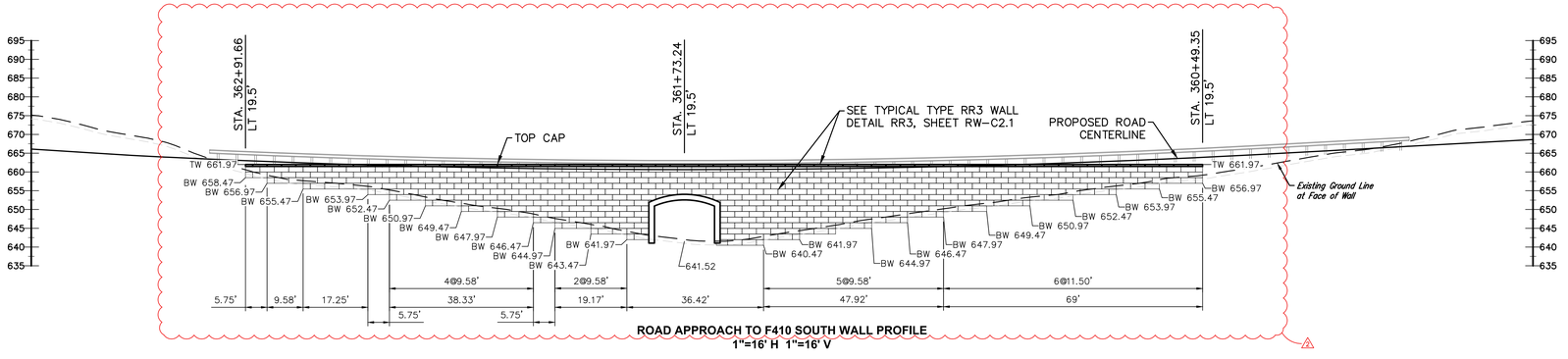

ROAD APPROACH TO F410 SOUTH WALL PROFILE
1"=16' H 1"=16' V

BIG VISTA - CLIFFSIDE CENTER PARK ROAD
STATION 361+80

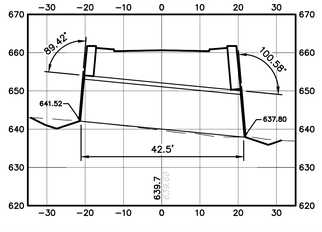

Seals

STATE OF KENTUCKY
ROBERT D. MARTIN
15958
LICENSED
PROFESSIONAL ENGINEER
Robert D. Martin 5/8/13

Engineering
Planning

1046 East Chestnut Street, Louisville, Kentucky 40204
502.584.9900 www.bravuraprojects.com
Kentucky • Indiana • Georgia • Tennessee • Florida

LANDSCAPE ARCHITECT
WRT
Wallace Roberts & Todd, LLC
1700 Market Street
28th Floor
Philadelphia, PA 19103
tel 215.732.5215
fax 215.732.2551

Architect
BRAVURA
111 West Washington Street
Louisville, Kentucky 40202
T: (502) 584-9900
F: (502) 584-0829

The Parklands of Floyds Fork, Project 4A

The Strand, Turkey Run Park and Broad Run
Louisville, Kentucky

Owner:
21st Century Parks, Inc.
371 W. Main St., Suite 202
Louisville, Kentucky 40202

REV #	DATE	DESCRIPTION
2	05-30-2013	Addendum#2: Revised wall elevation information

Job No: **12300.4AC**
Date: **May 8, 2013**
Scale:
Drawn By:
BID SET

Drawing Title:
Parklands of Floyds Fork
Big Vista Valley PROJECT 4A Retaining Wall Plan & Profile
Road Approach to F410

Drawing No:
RW-C1.8

May 30, 2013 - 11:56am
N:\12300.4AC - 21st Century Parks Phase 4A\SITE\Dwgs\Cds\12300.4AC-RETAINING WALLS-S.dwg (RW-C1.8)

GEOTECHNICAL NOTES:

REFER TO GEOTECHNICAL REPORT FOR ELEVATION OF SUBGRADE CONDITIONS AND REQUIREMENTS FOR RETAINING WALL DESIGN AND CONSTRUCTION.

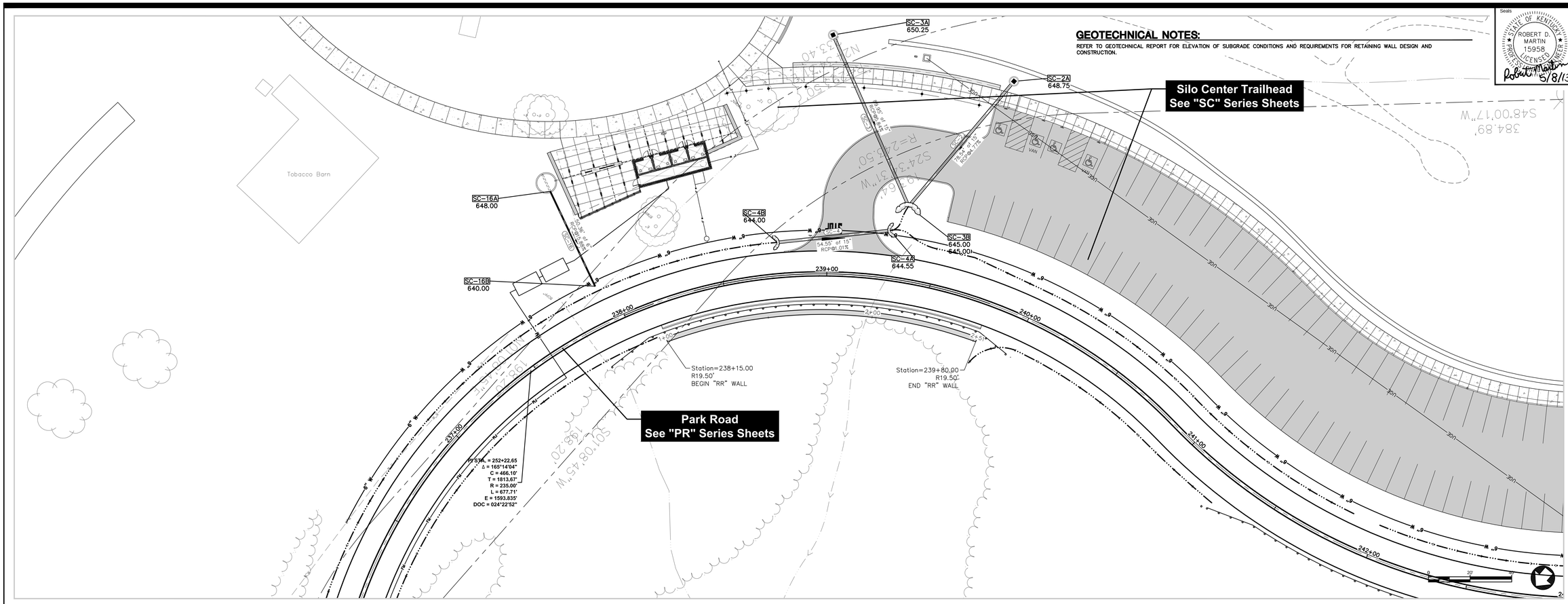

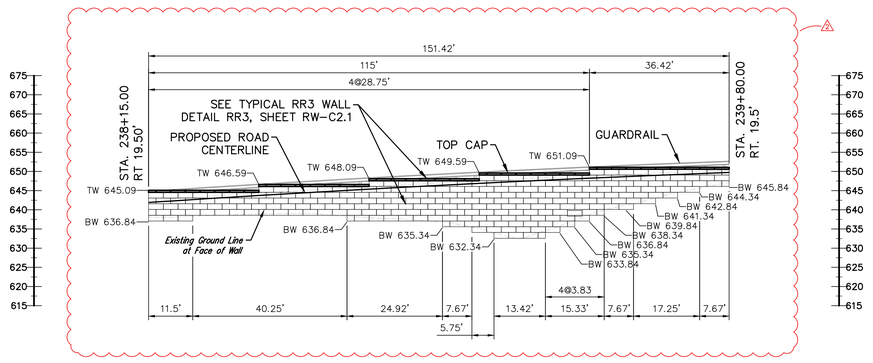

STOUT ROAD RELOCATION WALL PROFILE
1"=16' H 1"=16' V

Seals

STATE OF KENTUCKY
ROBERT D. MARTIN
15958
LICENSED PROFESSIONAL ENGINEER
5/8/13

Engineering
Planning

1046 East Chestnut Street, Louisville, Kentucky 40204
Phone: 502.589.2222 Internet: www.qk4.com
Kentucky • Indiana • Georgia • Tennessee • Florida

LANDSCAPE ARCHITECT
Wallace Roberts & Todd, LLC
1700 Market Street
28th Floor
Philadelphia, PA 19103
tel 215.732.5215
fax 215.732.2551

Architect
BRAVURA
111 West Washington Street
Louisville, Kentucky 40202
T: (502) 584-9900
F: (502) 584-0829

The Parklands of Floyds Fork, Project 4A

The Strand, Turkey Run Park and Broad Run
Louisville, Kentucky

Owner:
21st Century Parks, Inc.
371 W. Main St., Suite 202
Louisville, Kentucky 40202

REV #	DATE	DESCRIPTION
2	05-30-2013	Addendum#2: Revised wall elevation information

Job No: **12300.4AC**
Date: **May 8, 2013**
Scale:
Drawn By:

BID SET

Drawing Title:

Parklands of Floyds Fork

Silo Center
PROJECT 4A
Retaining Wall
Plan & Profile

Stout Road Relocation

Drawing No:

RW-C1.7

May 30, 2013 - 11:47am
C:\Users\Paul\Appdata\Local\Temp\AcPublish_3844\12300AC-RETAINING WALLS-C.dwg (RW-C1.7)

GEOTECHNICAL NOTES:

REFER TO GEOTECHNICAL REPORT FOR ELEVATION OF SUBGRADE CONDITIONS AND REQUIREMENTS FOR RETAINING WALL DESIGN AND CONSTRUCTION.

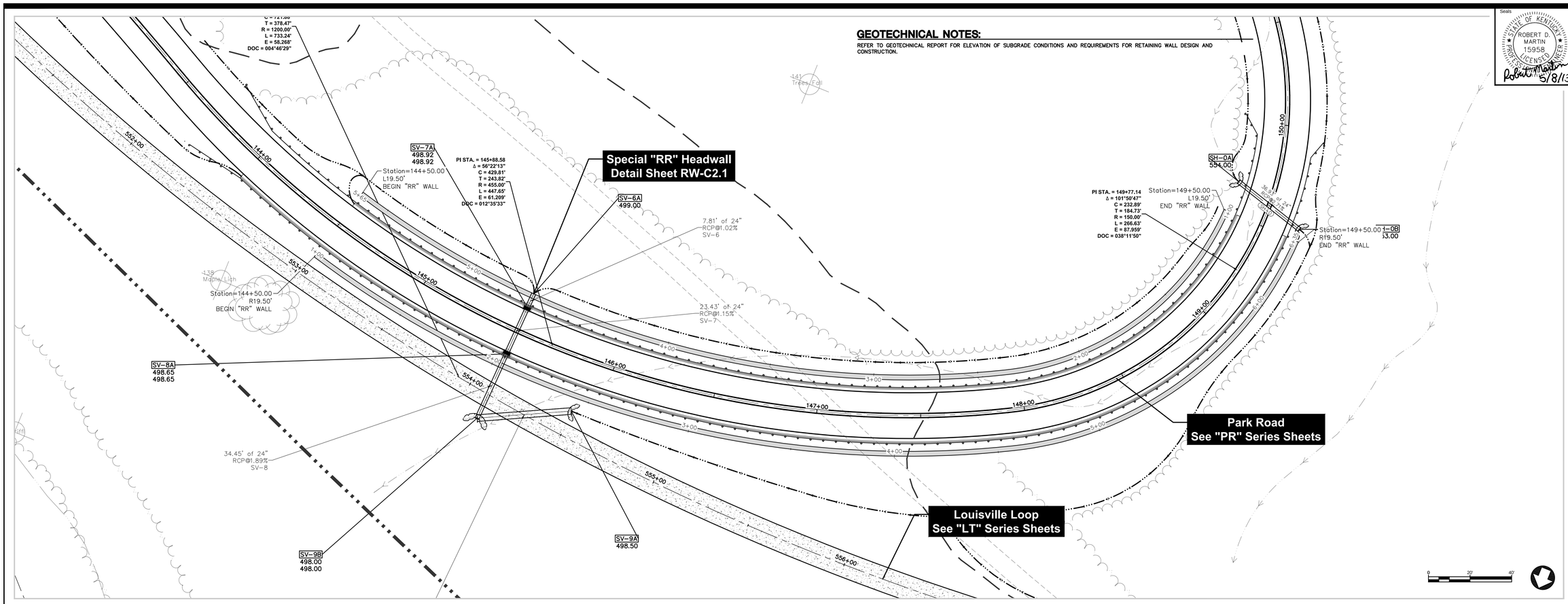

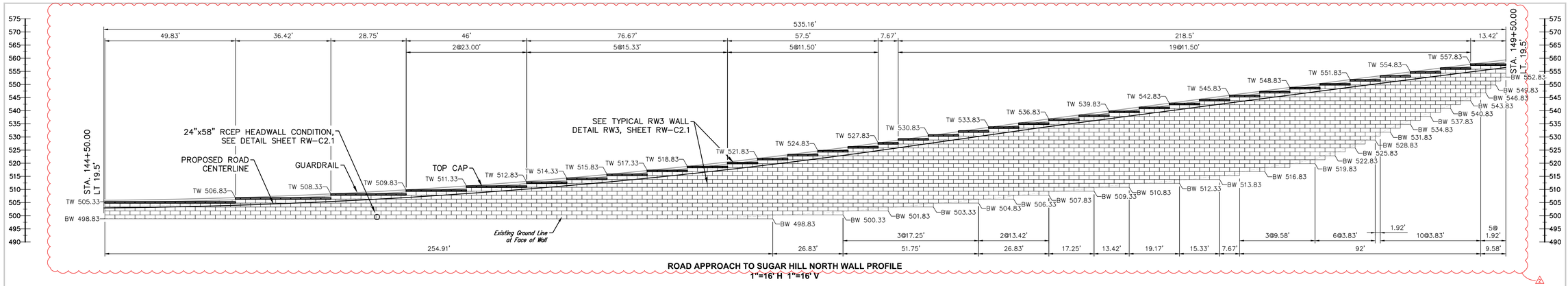

ROAD APPROACH TO SUGAR HILL NORTH WALL PROFILE
1"=16' H 1"=16' V

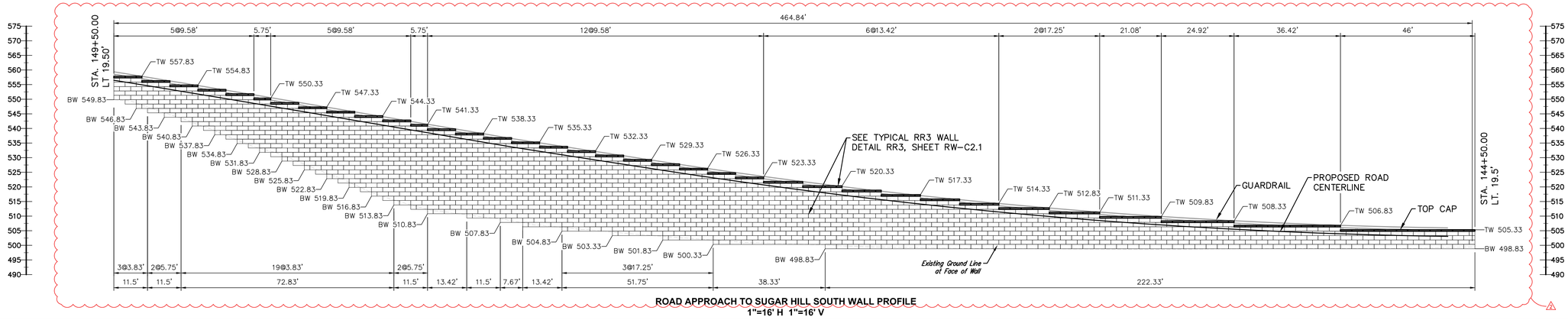

ROAD APPROACH TO SUGAR HILL SOUTH WALL PROFILE
1"=16' H 1"=16' V

Seals

STATE OF KENTUCKY
ROBERT D. MARTIN
15958
LICENSED
PROFESSIONAL ENGINEER
Robert D. Martin 5/8/13

Engineering
Planning

1046 East Chestnut Street, Louisville, Kentucky 40204
Phone: 502-585-2222 Internet: www.gk4.com
Kentucky - Indiana - Georgia - Tennessee - Florida

LANDSCAPE ARCHITECT

Wallace Roberts & Todd, LLC
1700 Market Street
28th Floor
Philadelphia, PA 19103
tel 215.732.5215
fax 215.732.2551

Architect

BRAVURA
111 West Washington Street
Louisville, Kentucky 40202
T: (502) 584-9900
F: (502) 584-0829

The Parklands of Floyds Fork, Project 4A

The Strand, Turkey Run Park and Broad Run
Louisville, Kentucky

Owner:
21st Century Parks, Inc.
371 W. Main St., Suite 202
Louisville, Kentucky 40202

REV #	DATE	DESCRIPTION
2	05-30-2013	Addendum#2: Revised wall elevation information

Job No: 12300.4AC
Date: May 8, 2013
Scale:
Drawn By:
BID SET

Drawing Title:
Parklands of Floyds Fork
Seaton Valley PROJECT 4A Retaining Wall Plan & Profile
Road Approach to Sugar Hill

Drawing No:
RW-C1.4

May 30, 2013 - 11:47am
C:\Users\holz\appdata\local\temp\AcPublish_3844\12300AC-RETAINING WALLS-C.dwg (RW-C1.4)

GEOTECHNICAL NOTES:

REFER TO GEOTECHNICAL REPORT FOR ELEVATION OF SUBGRADE CONDITIONS AND REQUIREMENTS FOR RETAINING WALL DESIGN AND CONSTRUCTION.

CONSTRUCTION NOTES:

THE ALIGNMENT OF THE LOUISVILLE LOOP FROM STA 209+20.56 TO STA 219+06.65 IS INTENDED TO BE CONSTRUCTED ALONG THE EXISTING SLOPE AND FOLLOW A 0% GRADE ALONG EXISTING CONTOUR ELEVATION 555.00 WHERE THE RIGHT (WEST) SIDE OF THE PROPOSED LOOP PAVEMENT SECTION IS ADJACENT TO THE EXISTING SLOPE. CONTRACTOR SHALL VERIFY THE EXISTING GROUND LINE AND, IF NEEDED, ADJUST THE HORIZONTAL ALIGNMENT OF THE LOOP AND EAST SIDE RETAINING WALL AS REQUIRED TO MAINTAIN THE ADJACENT RELATIONSHIP TO THE 555.00 CONTOUR ELEVATION ALONG THIS ENTIRE PORTION THE LOOP. THESE HORIZONTAL ADJUSTMENTS, IF NEEDED, ARE ANTICIPATED TO BE MINOR IN NATURE, AND WHERE REQUIRED, SHALL BE CONSIDERED AS INCIDENTAL TO LOOP AND RETAINING WALL CONSTRUCTION – NO ADDITIONAL COSTS FOR LOOP OR RETAINING WALL SHALL BE CONSIDERED.

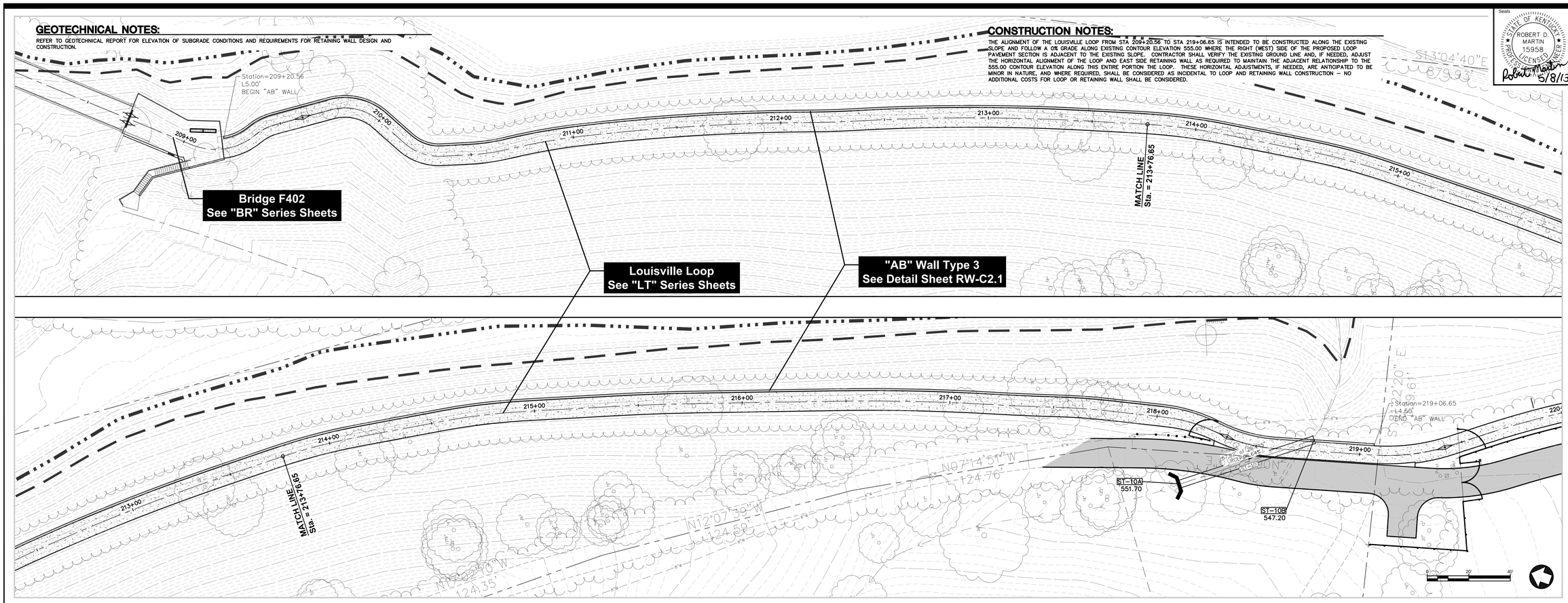

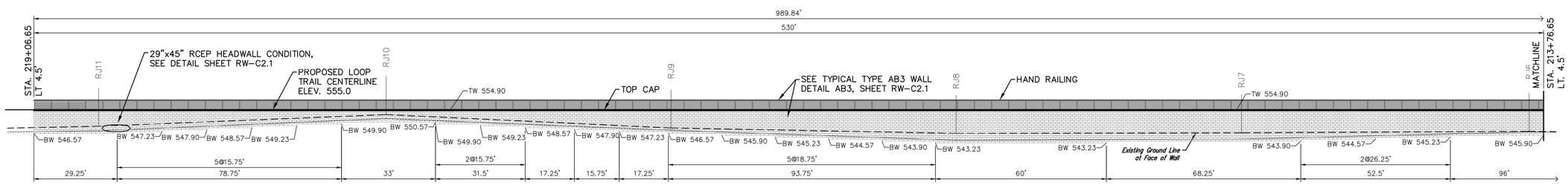

F402 TO HELM WALL PROFILE
1"=16' H 1"=16' V

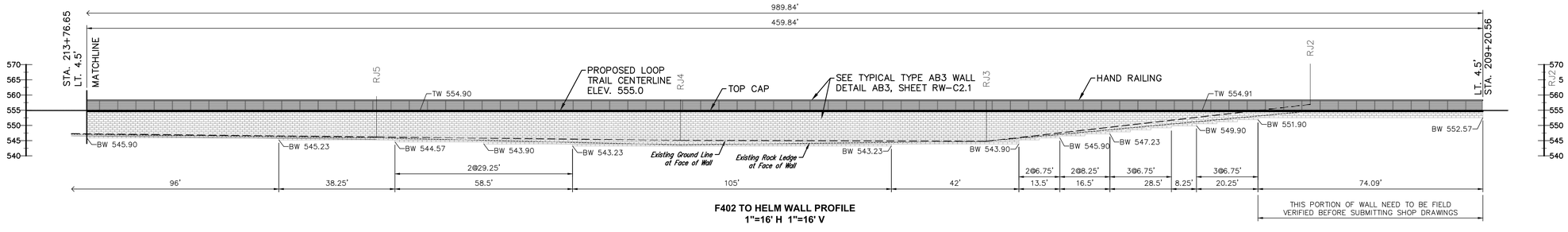

F402 TO HELM WALL PROFILE
1"=16' H 1"=16' V

Seals
STATE OF KENTUCKY
ROBERT D. MARTIN
15958
LICENSED
PROFESSIONAL ENGINEER
5/8/13

Engineering
Planning
1046 East Chestnut Street, Louisville, Kentucky 40204
502.584.6300 www.qkpartners.com
Kentucky • Indiana • Georgia • Tennessee • Florida

LANDSCAPE ARCHITECT
WRT
Wallace Roberts & Todd, LLC
1700 Market Street
28th Floor
Philadelphia, PA 19103
tel 215.732.5215
fax 215.732.2551

Architect
BRAVURA
111 West Washington Street
Louisville, Kentucky 40202
T: (502) 584-9900
F: (502) 584-0829

The Parklands of Floyds Fork, Project 4A

The Strand, Turkey Run Park and Broad Run
Louisville, Kentucky

Owner:
21st Century Parks, Inc.
371 W. Main St., Suite 202
Louisville, Kentucky 40202

REV #	DATE	DESCRIPTION
2	05-30-2013	Addendum2: Revised Wall and Existing Grade Line

Job No: 12300.4AC
Date: May 8, 2013
Scale:
Drawn By:
BID SET

Drawing Title:
Parklands of Floyds Fork
The Strand
PROJECT 4A
Retaining Wall Plan & Profile
F402 to Helm

Drawing No:
RW-C1.1

May 30, 2013 - 11:52am
N:\12300.4AC - 21st Century Parks Phase 4A\SITE\Dwgs\Cdcs\12300.4AC-RETAINING WALLS-N.dwg (RW-C1.1)

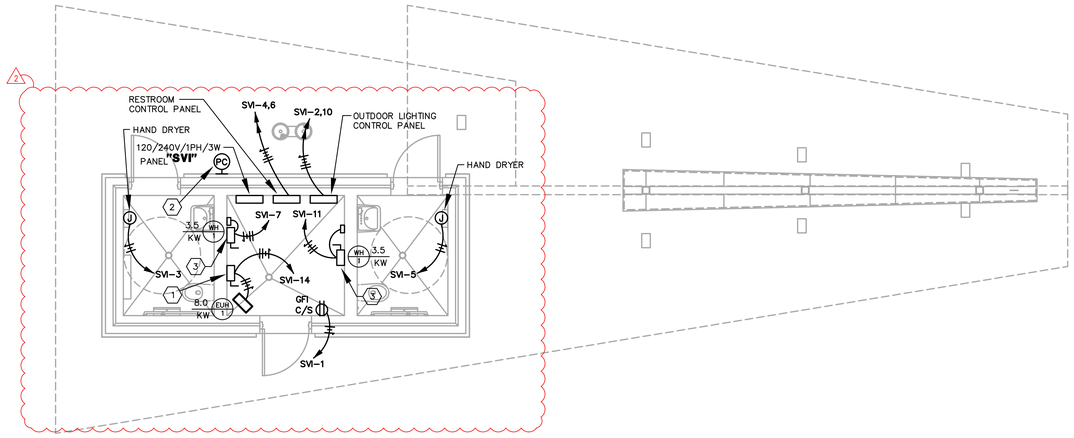

FLOOR PLAN - POWER/SYSTEMS

SCALE: 1/4" = 1'-0"

1 E5-101

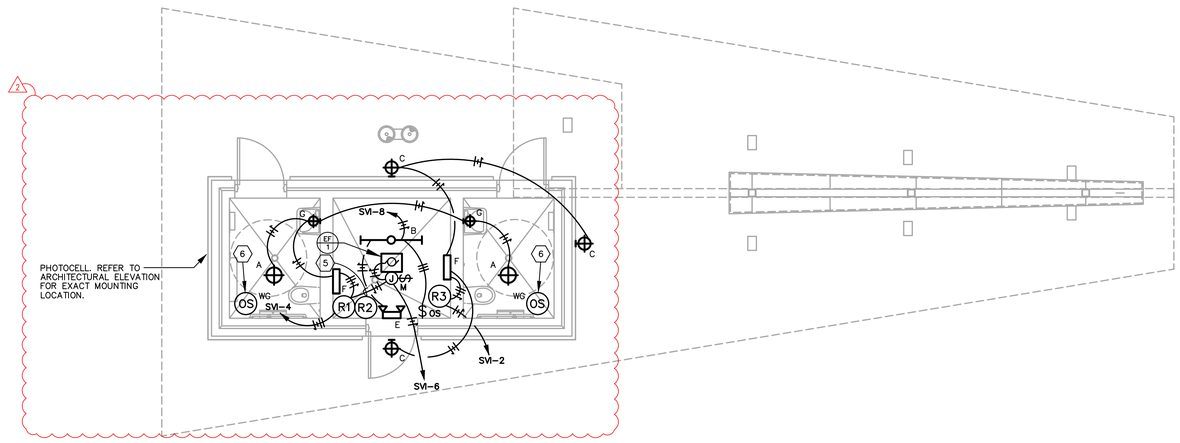

FLOOR PLAN - LIGHTING/POWER

SCALE: 1/4" = 1'-0"

2 E5-101

GENERAL NOTES (LIGHTING/POWER/SYSTEMS) :

- REFER TO THE ARCHITECT'S REFLECTED CEILING PLANS FOR EXACT LOCATIONS OF ALL CEILING MOUNTED LIGHT FIXTURES, ETC. REFER ALSO TO THE ARCHITECT'S CASEWORK DETAILS AND ROOM ELEVATIONS FOR EXACT LOCATIONS AND MOUNTING HEIGHTS OF LIGHT FIXTURES, ETC.
- ALL NEW WIRING SHALL BE #12 WITH A #12 INSULATED GROUND WIRE (U.O.N.). CONDUIT SHALL BE 3/4" MINIMUM. PROVIDE #10 FOR 120V AC BRANCH CIRCUITS OVER 50 FEET IN LENGTH.
- CONTRACTOR SHALL FOLLOW BRANCH CIRCUITING LAY-OUT, AS INDICATED ON THE FLOOR PLANS, WITH A MAXIMUM OF THREE (3) BRANCH CIRCUITS PER HOMERUN. EACH BRANCH CIRCUIT SHALL BE PROVIDED WITH A DEDICATED NEUTRAL CONDUCTOR. DEDICATED NEUTRAL CONDUCTORS SHALL BE CONSIDERED CURRENT CARRYING. IF ADDITIONAL CONDUCTORS ARE ROUTED IN THE SAME CONDUIT WITH THOSE INDICATED, CONTRACTOR SHALL DE-RATE ALL CURRENT CARRYING CONDUCTORS PER N.E.C. #310.15(B)(2), AND UPSIZE CONDUIT AS REQUIRED PER N.E.C. #300.17 AND ANNEX C. MULTIWIRE BRANCH CIRCUITS AS DEFINED IN N.E.C #100 / 210.4 (CIRCUITS SHARING A COMMON NEUTRAL CONDUCTOR) SHALL NOT BE PERMITTED.
- CONTRACTOR SHALL REVIEW ALL ARCHITECTURAL ELEVATIONS FOR MOUNTING HEIGHTS AND LOCATIONS OF ALL WALL MOUNTED DEVICES.
- ELECTRICAL EQUIPMENT LAYOUT IS DIAGRAMATIC ONLY. SUBMIT COORDINATION DRAWINGS FOR APPROVAL PRIOR TO INSTALLATION.
- ALL EXPOSED CONDUIT SHALL BE PAINTED RIGID STEEL (GRS). GRS SHALL HAVE 1 COAT OF PRIMER AND 2 COATES OF PAINT. PAINT FINISH SHALL BE SELECTED BY THE ARCHITECT.

TAGGED NOTES :

1. PROVIDE 60A/250V/2P DISCONNECT HEAVY DUTY SWITCH WITH NEMA-1 ENCLOSURE FOR CONNECTION TO UNIT HEATER AS INDICATED. COORDINATE EXACT MOUNTING LOCATION AND CONNECTION REQUIREMENTS WITH MECHANICAL CONTRACTOR PRIOR TO ROUGH-IN. FUSE DISCONNECT SWITCH PER EQUIPMENT NAMEPLATE RATING. PROVIDE UNISTRUT AS REQUIRED FOR MOUNTING OF DISCONNECT SWITCH.
2. BUILDING MOUNTED PHOTOCELL REFER TO ARCHITECTURAL ELEVATION FOR LOCATION AND SHEET E5-001 FOR FURTHER REQUIREMENTS.
3. PROVIDE 30A/250V/2P DISCONNECT HEAVY DUTY SWITCH WITH NEMA-1 ENCLOSURE FOR CONNECTION TO UNIT HEATER AS INDICATED. COORDINATE EXACT MOUNTING LOCATION AND CONNECTION REQUIREMENTS WITH MECHANICAL CONTRACTOR PRIOR TO ROUGH-IN. FUSE DISCONNECT SWITCH PER EQUIPMENT NAMEPLATE RATING. PROVIDE UNISTRUT AS REQUIRED FOR MOUNTING OF DISCONNECT SWITCH.
4. ROUTE UNSWITCHED HOT TO BATTERY BACK-UP INVERTER. ROUTE SWITCHED HOT THROUGH CONTACTOR PER DETAIL ON SHEET #E5-001.
5. ROUTE BRANCH CIRCUIT THROUGH CONTACTOR PER DETAIL ON SHEET #E5-001.
6. INSTALL OCCUPANCY SENSOR ON CEILING WITH WIRE GUARD. WIREGUARD TO BE PAINTED TO MATCH CEILING. WIREGUARD TO BE MOUNTED WITH STAINLESS STEEL TORK HEAD SCREWS.

PANELBOARD AND WIRING SCHEDULE

PANELBOARD: SV1 — AMPERES: 100 — VOLTAGE: 120/240 — PHASE: 1 — WIRE: 3 — MANUF.: SQUARE D — TYPE: NQOD

GND	CON	LOAD A	LOAD B	DESIGNATION	WIRE	BKR	CKT
12	3/4"	0.2		MECH. ROOM RCP	12	20/1	1
10	3/4"		2.3	HAND DRYER	10	30/1	3
10	3/4"	2.3		HAND DRYER	10	30/1	5
12	3/4"		1.8	WATER HEATER	12	20/2	7
---	---	1.8		----------	---	---	9
12	3/4"		1.8	WATER HEATER	12	20/2	11
---	---	1.8		----------	---	---	13
12	3/4"		0.2	LTG CONTROLS	12	20/1	15
				SPARE		20/1	17
				SPARE		20/1	19
				SPARE		20/1	21
				SPARE		20/1	23
				SPARE		20/1	25
				SPARE		20/1	27
				SPARE		20/1	29
		6.1	6.1	SUB-TOTAL KVA			

CKT	BKR	WIRE	DESIGNATION	LOAD A	LOAD B	CON	GND
2	20/1	12	BLDG MNTD OUTSIDE LTG	0.2		3/4"	12
4	20/1	12	RESTROOM LTG		0.2	3/4"	12
6	20/1	12	EF - 1	0.2		3/4"	12
8	20/1	12	MECH. ROOM LTG		0.1	3/4"	12
10	20/1	10	SITE LTG	0.2		3/4"	12
12	20/1		SPARE				
14	45/2		EUH - 1	4.0		3/4"	8
16	---	---	----------		4.0	---	---
18	20/1		SPARE				
20	20/1		SPARE				
22	20/1		SPARE				
24	20/1		SPARE				
26	20/1		SPARE				
28	*	*	TVSS			*	*
30	---	---	----------			---	---
			KVA SUB-TOTAL	4.6	4.3	21.1	
			KVA GRAND-TOTAL	10.7	10.4		

EMERGENCY POWER: NO — MAIN BREAKER:100/2P — A.I.C. RATING: 65,000
BRANCH: — MAIN LUGS:

POWER RISER TAGGED NOTES :

1. PROVIDE METER BASE PER LG&E REQUIREMENTS.
2. PROVIDE A PARALLEL CONNECTED TRANSIENT VOLTAGE SURGE SUPPRESSOR (TVSS), CATEGORY #B.
3. PROVIDE ONE (1) #3/0 COPPER GROUNDING ELECTRODE FROM NEW GROUND BAR AT PANELBOARD "SVI" TO THREE NEW 5/8" X 10'-0" COPPERWELD GROUND RODS AS REQUIRED. CONTRACTOR SHALL TEST GROUND SYSTEM IMPEDANCE LEVEL AND IF NOT 5 Ohm, CONTRACTOR SHALL ADD GROUND RODS AS NECESSARY TO MEET THIS REQUIREMENT. GROUNDS SHALL ALSO BE CONNECTED TO BUILDING STEEL AND COLD WATER PIPING PER NEC.

POWER RISER FEEDERS :

- A: NOT USED.
- B: 3 #4/0, 1 #4 GROUND IN 2" SCHEDULE 80 PVC CONDUITS (SCHEDULE #80 PVC WHERE EXPOSED AND FOR ELLS) WITH ONE ADDITIONAL EMPTY 2" SPARE CONDUIT. MINIMUM BURY AT 42".
- C: 1 #3/0, BARE COPPER GROUND (ROUTE IN 1" CONDUIT WHERE EXPOSED).
- D: 3 #8, 1 #10 GROUND IN 3/4" CONDUIT.

POWER RISER GENERAL NOTES :

- ALL CONDUCTORS SHALL BE COPPER (SEE SVIECIFICATIONS FOR TYPES).
- REFER TO DETAIL FOR TYPICAL PANEL LABELING REQUIREMENTS.
- AS PART OF THIS CONTRACT, PROVIDE A COORDINATION/FAULT CURRENT STUDY FOR BREAKERS ON THIS PROJECT. STUDY SHALL INCLUDE ALL MAINS AND FEEDERS SHOWN ON THESE DRAWINGS AND SHALL EXTEND TO THE MAIN LUGS OR BREAKER OF THE FURTHEST DEVICE DOWNSTREAM SUBMIT AS SHOP DRAWING TO ENGINEER PRIOR TO ORDERING ANY POWER DISTRIBUTION EQUIPMENT.
- AS PART OF THIS CONTRACT, PROVIDE A COMPREHENSIVE ARC FLASH HAZARD ANALYSIS FOR POWER DISTRIBUTION DEVICES ON THIS PROJECT. PROVIDE ALL LABELS, WARNING SIGNAGE, ETC. PER NFPA-70E AND OSHA REQUIREMENTS.

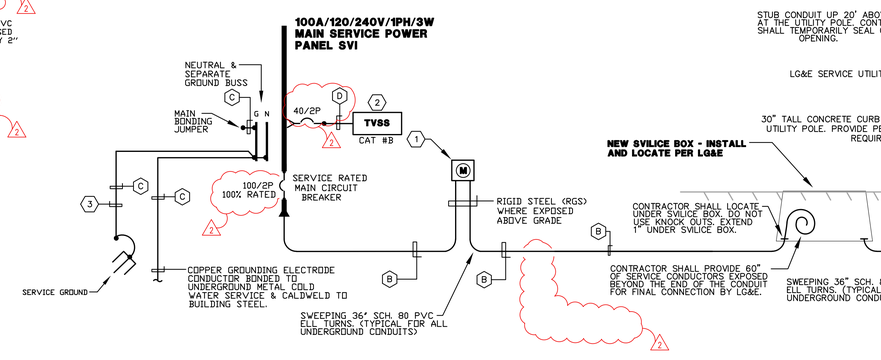

POWER DISTRIBUTION RISER DIAGRAM

NO SCALE

3 E5-101

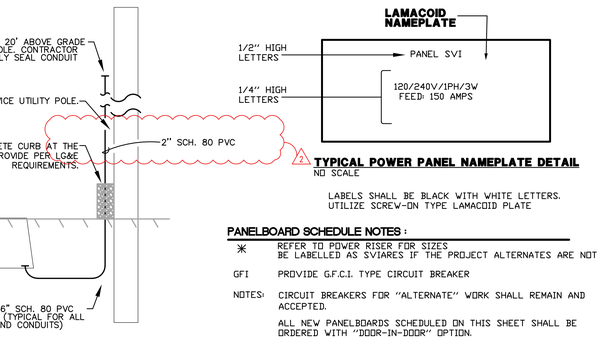

TYPICAL POWER PANEL NAMEPLATE DETAIL

NO SCALE

LABELS SHALL BE BLACK WITH WHITE LETTERS. UTILIZE SCREW-ON TYPE LAMACOID PLATE

PANELBOARD SCHEDULE NOTES :

- *: REFER TO POWER RISER FOR SIZES BE LABELLED AS SVIARES IF THE PROJECT ALTERNATES ARE NOT
- GFI: PROVIDE G.F.C.I. TYPE CIRCUIT BREAKER
- NOTES: CIRCUIT BREAKERS FOR "ALTERNATE" WORK SHALL REMAIN AND ACCEPTED.
- ALL NEW PANELBOARDS SCHEDULED ON THIS SHEET SHALL BE ORDERED WITH "DOOR-IN-DOOR" OPTION.

STATE OF KENTUCKY — BRIAN K. BAUMGARTLE — 23119 — LICENSED PROFESSIONAL ENGINEER

Architecture Engineering Planning
815 West Market Street, Suite 300, Louisville, Kentucky 40202
Phone: 502-585-2222 Facsimile: 502-992-0065 Internet: www.gk4.com
Kentucky • Indiana • Georgia • West Virginia • Tennessee • Florida
MEP ENGINEERING CONSULTANTS
10411 Meeting Street, Prospect, Kentucky 40059
502 326.9000 • FAX 502.326.9891
www.comtechpllc.com
Architect
BRAVURA
111 West Washington Street
Louisville, Kentucky 40202
T: (502) 584-9900
F: (502) 584-0829

The Parklands of Floyds Fork, Project 4A
The Strand, Turkey Run Park and Broad Run Park
Louisville, Kentucky

Owner:
21st Century Parks, Inc.
371 W. Main St., Suite 202
Louisville, Kentucky 40202

REV #	DATE	DESCRIPTION
	05/06/2013	ISSUED FOR BID
1	05/20/2013	ADDENDUM #2: REVISED NOTES, CIRCUITING AND RISER

Job No: 155-617
Date: May 8, 2013
Scale: As Shown
Drawn By:
ISSUED FOR BID

Drawing Title:
Parklands of Floyds Fork
PROJECT 4A
Seaton Valley
2-Hole Trailhead
Plans - Electrical

Drawing No:
E5-101

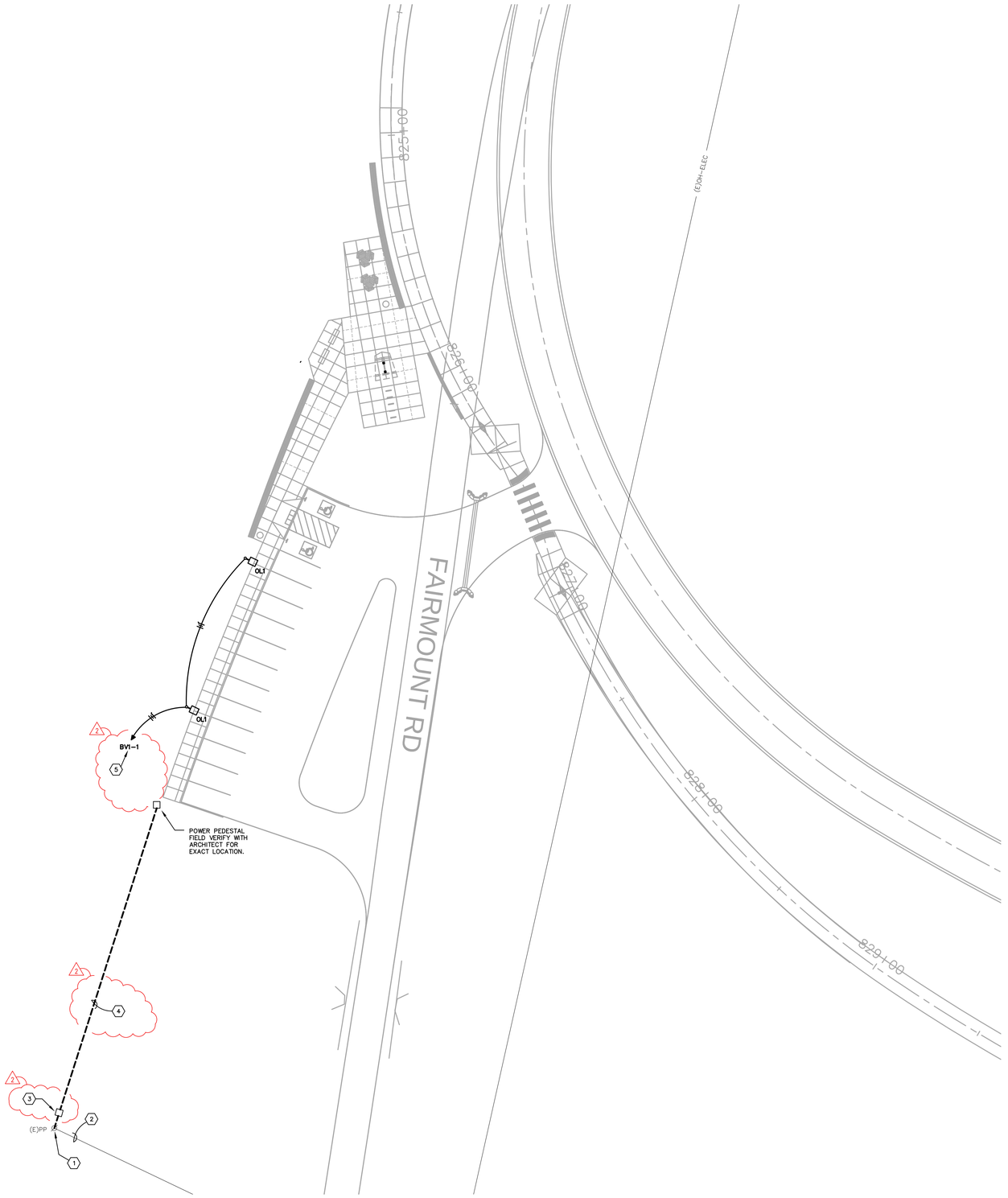

PARITAL SITE PLAN BIG VISTA - ELECTRICAL

SCALE 1" = 20'

1 E4-101

SITE UTILITIES PLAN (GENERAL NOTES):

- DO NOT SCALE FROM MECHANICAL OR ELECTRICAL DRAWINGS. FIELD VERIFY REQUIRED DIMENSIONS.
- REFER TO ALL OTHER PLANS AND SPECIFICATIONS, BUT ESPECIALLY TO:
  - A) THE SITE SURVEY
  - B) THE ARCHITECTURAL SITE PLAN
  - C) THE SITE GRADING PLAN
  - D) THE PLANTING PLAN (WHERE AVAILABLE)
  - E) FOUNDATION PLAN(S)
  - F) APPROPRIATE MECHANICAL & ELECTRICAL FLOOR PLANS FOR SERVICE CONTINUATIONS
  - G) THE SITE UTILITY PLAN – MECHANICAL

  WHERE THERE ARE CONFLICTS AMONG PLANS AND/OR RELATED SPECIFICATIONS, ADVISE ENGINEER AT LEAST TWELVE DAYS PRIOR TO SUBMISSION OF BIDS.
- ALL FEES AND ANY OTHER COSTS TO UTILITY COMPANIES, MUNICIPALITIES, INSPECTORS, REVIEWING AGENCIES, ETC. ARE TO BE INCLUDED AS A PART OF THIS CONTRACT.
- CONTRACTOR SHALL CUT AND PATCH ALL PAVEMENT, CURBING, ETC. AS REQUIRED, FOR WORK. CONTRACTOR SHALL REPAIR ALL LANDSCAPING THAT IS DAMAGED FOR WORK.
- FEDERAL, STATE, LOCAL, MUNICIPALITY AND UTILITY COMPANY CODES, RULES, REGULATIONS AND REQUIREMENTS APPLY UNLESS EXCEEDED BY THIS DESIGN.
- WHEN INTERRUPTION OF AN EXISTING UTILITY OR SERVICES IS PLANNED OR OCCURS ACCIDENTALLY, THE CONTRACTOR(S) SHALL WORK CONTINUOUSLY AS NEEDED TO RESTORE SAME PROVIDING PREMIUM TIME AS NEEDED AT NO INCREASE IN THE CONTRACT PRICE.
- PLANNED INTERRUPTION OF ANY SERVICE SHALL BE COORDINATED WITH THE APPROPRIATE MUNICIPALITY OR UTILITY COMPANY, THE ARCHITECT AND THE BUILDING OPERATORS AT LEAST ONE WEEK IN ADVANCE OF ANTICIPATED INTERRUPTION. A SCHEDULE FOR THESE OUTAGES SHALL BE DEVELOPED AND AGREED UPON BETWEEN THE PARTIES MENTIONED TO AVOID UNNECESSARY INCONVENIENCE TO THE OWNER OR ANY AFFECTED PARTY. NOTIFY THE UTILITY COMPANY OF ANY ANTICIPATED SERVICES REQUIRED FROM THEM AT LEAST TWO WEEKS IN ADVANCE IN WRITING AND INSURE THAT THEY DO NOT DELAY WORK.
- LOCATIONS, DEPTHS, MATERIAL TYPES, ELEVATIONS, ETC. OF ALL APPURTENANCES, LINES, BUILDINGS, ETC. INDICATED ON THESE DRAWINGS WERE TAKE FROM VARIOUS SOURCES, ARE DIAGRAMMATIC ONLY AND ARE SUBJECT TO SUBSTANTIAL VARIATION FROM EXISTING CONDITIONS. EXISTING UTILITIES LOCATIONS MAY VARY (CONSEQUENTLY ALL CONTRACTORS SHALL EXERCISE EXTREME CARE IN THE COURSE OF THEIR WORK SO AS INSURE THAT THEY DO NOT INTERRUPT ANY EXISTING SERVICE. FOR SAFETY PURPOSES, PAY PARTICULAR ATTENTION TO THIS PRECAUTION RELATIVE TO NATURAL GAS AND ELECTRICAL LINES. ALL WORK SHALL BE PERFORMED IN ACCORD WITH ALL FEDERAL, STATE, AND/OR LOCAL RULES, REGULATIONS, STANDARDS AND SAFETY REQUIREMENTS. UTILITIES SHALL ALSO BE INSTALLED IN ACCORD WITH THE APPLICABLE MUNICIPALITY OR UTILITY COMPANY STANDARDS. IN ALL CASES, THE MOST STRINGENT REQUIREMENT SHALL APPLY. IF ANY VARIATION OCCURS, CONSULT THE BUILDING ENGINEER AND THE ELECTRICAL/MECHANICAL ENGINEER'S REPRESENTATIVE). CONTRACTOR SHALL VISIT SITE AND FIELD VERIFY THE ROUTING OF ALL UTILITIES NEW AND EXISTING PRIOR TO SUBMISSION OF BIDS. SUBMISSION OF A BID PROPOSAL INDICATES THAT THE CONTRACTOR IS FULLY AWARE OF ALL OBSTRUCTIONS AND WILL INSTALL ALL OF THE NEW UTILITIES WITHOUT REQUESTS FOR ANY ADDITIONAL CHANGES.
- CONTRACTOR SHALL PATCH AND REPAIR ALL LANDSCAPING THAT IS DISTURBED BY WORK OCCURRING IN THIS PROJECT AS REQUIRED.

PROTECTION OF TREES IS CRITICALLY IMPORTANT WITHIN ALL AREAS OF THE WORK. PRIOR TO ANY CLEARING, THE "LIMITS OF DISTURBANCE" FOR CONSTRUCTION OF ALL BUILDINGS, ARCHITECTURAL FEATURES, PLAZAS, AND UNDERGROUND UTILITIES SHALL BE STAKED BY THE CONTRACTOR, AND THE STAKED ALIGNMENTS SHALL BE REVIEWED BY THE OWNER'S DESIGNATED TREE PROTECTION REPRESENTATIVE. NO CLEARING OR CONSTRUCTION ACTIVITY SHALL OCCUR UNTIL THE AREAS TO BE DISTURBED ARE STAKED, REVIEWED AND APPROVED BY THE OWNER'S REPRESENTATIVE. CLEARING SHALL BE MINIMIZED AND STRICTLY LIMITED TO THE STAKED AND APPROVED AREAS OF DISTURBANCE. DURING CONSTRUCTION, THE CONTRACTOR SHALL AVOID USING ANY UNCLEARED WOODED AREAS OUTSIDE OF THE APPROVED AREAS OF DISTURBANCE FOR ACCESS, MATERIAL STORAGE OR PARKING.

TAGGED NOTES :

1. PROPOSED LOCATION FOR NEW UTILITY COMPANY POLE-MOUNTED SERVICE TRANSFORMER. CONTRACTOR SHALL PROVIDE SPLICE BOX PER UTILITY COMPANY REQUIREMENTS.COORDINATE EXACT MOUNTING LOCATION AND REQUIREMENTS WITH UTILITY COMPANY PRIOR TO ROUGH-IN.
2. NEW LG&E OVERHEAD PRIMARY.
3. PROVIDE METER BASE PER UTILITY COMPANY REQUIREMENTS. REFER TO SHEET #UE-101 FOR MOUNTING DETAIL. INSTALL METER BASE 5'-0" FROM POLE MOUNTED UTILITY TRANSFORMER.
4. PROVIDE NEW UNDERGROUND SECONDARY LATERAL SERVICE. REFER TO POWER DISTRIBUTION RISER DIAGRAM FOR SIZING. MINIMUM BURY OF 42" FROM TOP OF CONDUITS (FIELD VERIFY BEST ROUTING).
5. ROUTE CIRCUIT #BV1-1 THROUGH OUTDOOR LIGHTING CONTROL PANEL. SEE E4-001.

STATE OF KENTUCKY
BRIAN K. BAUMGARTLE
23119
LICENSED PROFESSIONAL ENGINEER

Architecture
Engineering
Planning
815 West Market Street, Suite 300, Louisville, Kentucky 40202
Phone: 502-585-2222 Facsimile: 502-992-0065 Internet: www.gk4.com
Kentucky • Indiana • Georgia • West Virginia • Tennessee • Florida

MEP ENGINEERING CONSULTANTS
10411 Meeting Street,
Prospect, Kentucky 40059
502 326.9000 • FAX 326.9001
www.constantengineers.com

Architect
BRAVURA
111 West Washington Street
Louisville, Kentucky 40202
T: (502) 584-9900
F: (502) 584-0829

The Parklands of Floyds Fork, Project 4A
The Strand, Turkey Run Park and Broad Run Park
Louisville, Kentucky

Owner:
21st Century Parks, Inc.
371 W. Main St., Suite 202
Louisville, Kentucky 40202

REV #	DATE	DESCRIPTION
	05/06/2013	ISSUED FOR BID
1	05/20/2013	ADDENDUM #2: REVISED ELECTRICAL SERVICE AND CIRCUITING

Job No: 155-617
Date: May 8, 2013
Scale: As Shown
Drawn By:
ISSUED FOR BID

Drawing Title:
Parklands of Floyds Fork
PROJECT 4A
Big Vista kiosk
Electrical Site Plan

Drawing No:
E4-101

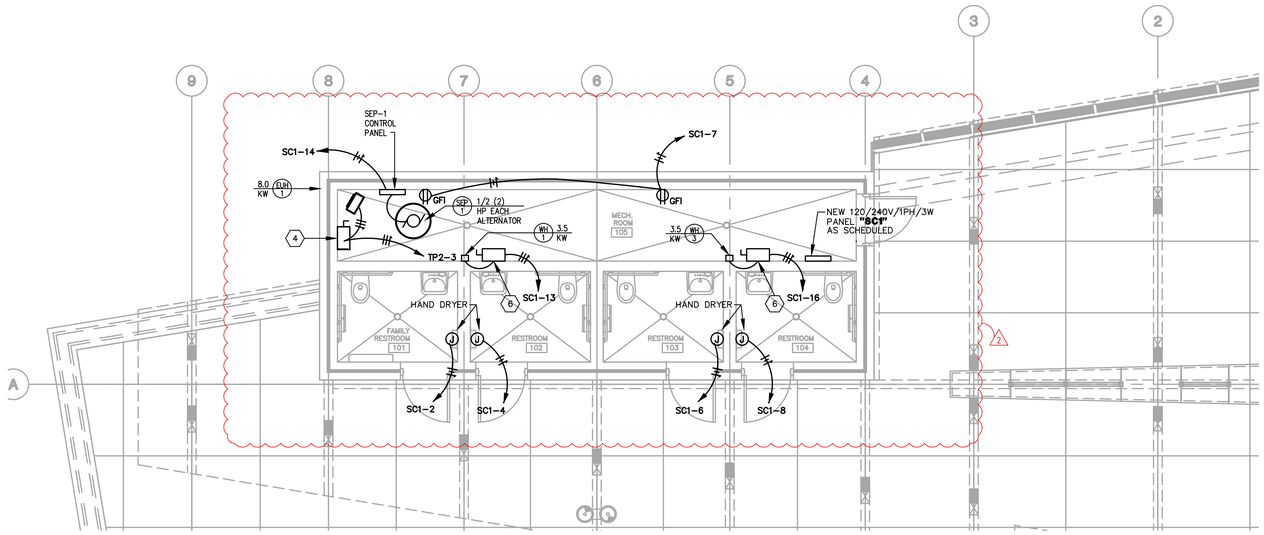

FLOOR PLAN - POWER/SYSTEMS

SCALE: 1/4" = 1'-0"

1 E3-101

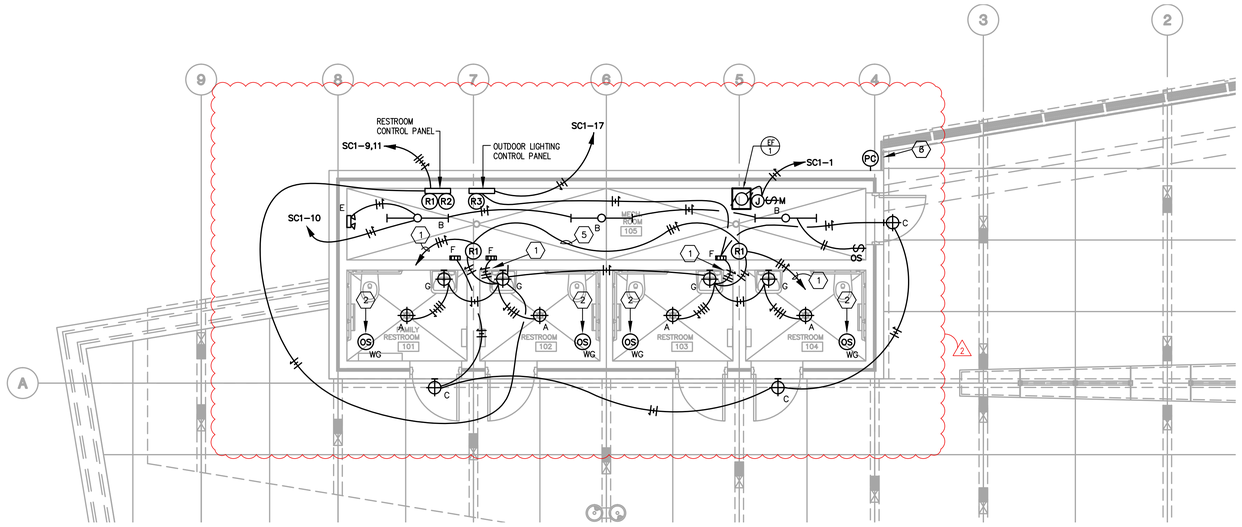

FLOOR PLAN - LIGHTING/POWER

SCALE: 1/4" = 1'-0"

2 E3-101

GENERAL NOTES (LIGHTING/POWER/SYSTEMS):

- REFER TO THE ARCHITECT'S REFLECTED CEILING PLANS FOR EXACT LOCATIONS OF ALL CEILING MOUNTED LIGHT FIXTURES, ETC. REFER ALSO TO THE ARCHITECT'S CASEWORK DETAILS AND ROOM ELEVATIONS FOR EXACT LOCATIONS AND MOUNTING HEIGHTS OF LIGHT FIXTURES, ETC.
- ALL NEW WIRING SHALL BE #12 WITH A #12 INSULATED GROUND WIRE (U.O.N.). CONDUIT SHALL BE 3/4" MINIMUM. PROVIDE #10 FOR 120V AC BRANCH CIRCUITS OVER 50 FEET IN LENGTH.
- CONTRACTOR SHALL FOLLOW BRANCH CIRCUITING LAY-OUT, AS INDICATED ON THE FLOOR PLANS, WITH A MAXIMUM OF THREE (3) BRANCH CIRCUITS PER HOMERUN. EACH BRANCH CIRCUIT SHALL BE PROVIDED WITH A DEDICATED NEUTRAL CONDUCTOR. DEDICATED NEUTRAL CONDUCTORS SHALL BE CONSIDERED CURRENT CARRYING. IF ADDITIONAL CONDUCTORS ARE ROUTED IN THE SAME CONDUIT WITH THOSE INDICATED, CONTRACTOR SHALL DE-RATE ALL CURRENT CARRYING CONDUCTORS PER N.E.C. #310.15(B)(2), AND UPSIZE CONDUIT AS REQUIRED PER N.E.C. #300.17 AND ANNEX C. MULTIWIRE BRANCH CIRCUITS AS DEFINED IN N.E.C #100 / 210.4 (CIRCUITS SHARING A COMMON NEUTRAL CONDUCTOR) SHALL NOT BE PERMITTED.
- CONTRACTOR SHALL REVIEW ALL ARCHITECTURAL ELEVATIONS FOR MOUNTING HEIGHTS AND LOCATIONS OF ALL WALL MOUNTED DEVICES.
- ELECTRICAL EQUIPMENT LAYOUT IS DIAGRAMATIC ONLY. SUBMIT COORDINATION DRAWINGS FOR APPROVAL PRIOR TO INSTALLATION.
- ALL EXPOSED CONDUIT SHALL BE PAINTED RIGID STEEL (GRS). GRS SHALL HAVE 1 COAT OF PRIMER AND 2 COATES OF PAINT. PAINT FINISH SHALL BE SELECTED BY THE ARCHITECT.

TAGGED NOTES:

1. ROUTE UNSWITCHED HOT TO BATTERY BACK-UP INVERTER. ROUTE SWITCHED HOT THROUGH CONTACTOR PER DETAIL ON SHEET #E3-001.
2. INSTALL OCCUPANCY SENSOR ON CEILING WITH WIRE GUARD. WIREGUARD TO BE PAINTED TO MATCH CEILING. WIREGUARD TO BE MOUNTED WITH STAINLESS STEEL TORK HEAD SCREWS.
3. BUILDING MOUNTED PHOTOCELL. REFER TO ARCHITECTURAL ELEVATIONS FOR LOCATION AND SHEET E5-001 FOR FURTHER REQUIREMENTS.
4. PROVIDE 60A/250V/2P DISCONNECT HEAVY DUTY SWITCH WITH NEMA-1 ENCLOSURE FOR CONNECTION TO EQUIPMENT AS INDICATED. COORDINATE EXACT MOUNTING LOCATION AND CONNECTION REQUIREMENTS WITH SITE CIVIL CONTRACTOR PRIOR TO ROUGH-IN. FUSE DISCONNECT SWITCH PER EQUIPMENT NAMEPLATE RATING. PROVIDE UNISTRUT AS REQUIRED FOR MOUNTING OF DISCONNECT SWITCH.
5. ROUTE BRANCH CIRCUIT THROUGH CONTACTOR PER DETAIL ON SHEET #E3-001.
6. PROVIDE 30A/250V/2P DISCONNECT HEAVY DUTY SWITCH WITH NEMA-1 ENCLOSURE FOR CONNECTION TO SEWAGE EJECTION PUMP AS INDICATED. COORDINATE EXACT MOUNTING LOCATION AND CONNECTION REQUIREMENTS WITH SITE CIVIL CONTRACTOR PRIOR TO ROUGH-IN. FUSE DISCONNECT SWITCH PER EQUIPMENT NAMEPLATE RATING. PROVIDE UNISTRUT AS REQUIRED FOR MOUNTING OF DISCONNECT SWITCH.

PANELBOARD AND WIRING SCHEDULE

PANELBOARD: SC1 AMPERES: 100 VOLTAGE: 120/240 PHASE: 1 WIRE: 3 MANUF.: SQUARE D TYPE: NQOD (30-POLE)

GND	CON	LOAD A	LOAD B	DESIGNATION	WIRE	BKR	CKT
12	3/4"	0.5		EF-1	12	20/1	1
8	3/4"		4.0	EUH-1	8	45/2	3
---	---	4.0		----------	---	---	5
12	3/4"		0.4	RCP	12	20/1	7
				SPARE		20/1	9
12	3/4"		1.0	RESTROOM LTG	12	20/1	11
12	3/4"	1.8		WATER HEATER	12	20/2	13
---	---		1.8	----------	---	---	15
12	3/4"	0.2		BLDG MNTD OUTSIDE LTG	12	20/1	17
12	3/4"		0.2	LTG CONTROLS	12	20/1	19
				SPARE		20/1	21
				SPARE		20/1	23
				SPARE		20/1	25
				SPARE		20/1	27
				SPARE		20/1	29
		6.5	7.4	SUB-TOTAL KVA			

CKT	BKR	WIRE	DESIGNATION	LOAD A	LOAD B	CON	GND
2	30/1	12	HAND DRYER	0.5		3/4"	12
4	30/1	12	HAND DRYER		0.1	3/4"	12
6	30/1	12	HAND DRYER	0.2		3/4"	12
8	30/1	12	HAND DRYER		0.1	3/4"	12
10	20/1	12	MECH ROOM - LTG	0.1		3/4"	12
12	20/1	10	SITE LTG		1.0	3/4"	10
14	20/1	10	SEP-1	1.2		3/4"	10
16	20/2	12	WATER HEATER		1.8	3/4"	12
18	---	---	----------	1.8		---	---
20	20/1		SPARE				
22	20/1		SPARE				
24	20/1		SPARE				
26	20/1		SPARE				
28	*	*	TVSS			*	*
30	---	---	----------			---	---
			KVA SUB-TOTAL	3.8	3.0	20.7	
			KVA GROSS-TOTAL	10.3	10.4		

EMERGENCY POWER: NO
BRANCH:
MAIN BREAKER:100/2P
MAIN LUGS:
A.I.C. RATING: 65,000

POWER RISER TAGGED NOTES:

1. PROVIDE METER BASE PER LG&E REQUIREMENTS.
2. PROVIDE A PARALLEL CONNECTED TRANSIENT VOLTAGE SURGE SUPPRESSOR (TVSS), CATEGORY #B. UNIT SHALL BE CURRENT TECHNOLOGY #EGPE2 80, 120/240, 1Ø, 3W OR APPROVED EQUAL. PROVIDE WITH OPTIONAL EVENT COUNTER. MOUNT BELOW PANEL BEING PROTECTED AS RECOMMENDED BY EQUIPMENT MANUFACTURER. ALIGN COVERS AND INSTALL WITHOUT GAP BETWEEN TVSS AND PANELBOARD.
3. PROVIDE ONE (1) #3/0 COPPER GROUNDING ELECTRODE FROM NEW GROUND BAR AT PANELBOARD "SC1" TO THREE NEW 5/8" X 10'-0" COPPERWELD GROUND RODS AS REQUIRED. CONTRACTOR SHALL TEST GROUND SYSTEM IMPEDANCE LEVEL AND IF NOT 5 Ohm, CONTRACTOR SHALL ADD GROUND RODS AS NECESSARY TO MEET THIS REQUIREMENT. GROUNDS SHALL ALSO BE CONNECTED TO BUILDING STEEL AND COLD WATER PIPING PER NEC.

POWER RISER FEEDERS:

- A: NOT USED.
- B: 3 #4/0, 1 #2 GROUND IN 2" SCHEDULE 80 PVC CONDUITS (SCHEDULE #80 PVC WHERE EXPOSED AND FOR ELLS) WITH ONE ADDITIONAL EMPTY 2" SPARE CONDUIT. MINIMUM BURY AT 42".
- C: 1 #3/0, BARE COPPER GROUND (ROUTE IN 1-1/4" CONDUIT WHERE EXPOSED).
- D: 1 #3/0, BARE COPPER GROUND (ROUTE IN 1" CONDUIT WHERE EXPOSED).
- E: 3 #8, 1 #10 GROUND IN 3/4" CONDUIT.
- F: NOT USED.

POWER RISER GENERAL NOTES:

- ALL CONDUCTORS SHALL BE COPPER (SEE SPECIFICATIONS FOR TYPES).
- REFER TO DETAIL FOR TYPICAL PANEL LABELING REQUIREMENTS.
- AS PART OF THIS CONTRACT, PROVIDE A COORDINATION/FAULT CURRENT STUDY FOR BREAKERS ON THIS PROJECT. STUDY SHALL INCLUDE ALL MAINS AND FEEDERS SHOWN ON THESE DRAWINGS AND SHALL EXTEND TO THE MAIN LUGS OR BREAKER OF THE FURTHEST DEVICE DOWNSTREAM. SUBMIT AS SHOP DRAWING TO ENGINEER PRIOR TO ORDERING ANY POWER DISTRIBUTION EQUIPMENT.
- AS PART OF THIS CONTRACT, PROVIDE A COMPREHENSIVE ARC FLASH HAZARD ANALYSIS FOR POWER DISTRIBUTION DEVICES ON THIS PROJECT. PROVIDE ALL LABELS, WARNING SIGNAGE, ETC. PER NPFA-70E AND OSHA REQUIREMENTS.

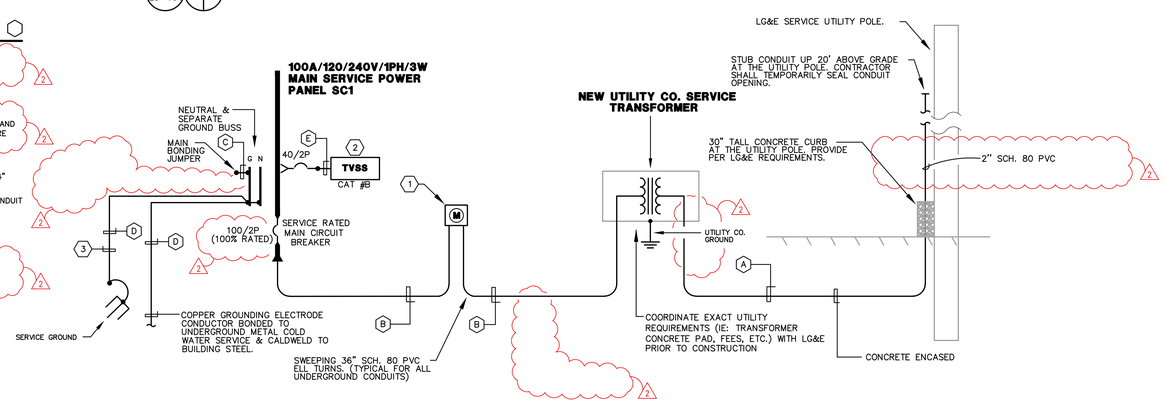

POWER DISTRIBUTION RISER DIAGRAM

NO SCALE

3 E3-101

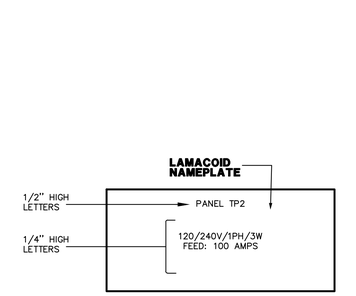

TYPICAL POWER PANEL NAMEPLATE DETAIL
NO SCALE

LABELS SHALL BE BLACK WITH WHITE LETTERS.
UTILIZE SCREW-ON TYPE LAMACOID PLATE

PANELBOARD SCHEDULE NOTES:

* REFER TO POWER RISER FOR SIZES BE LABELLED AS SPARES IF THE PROJECT ALTERNATES ARE NOT

GFI PROVIDE G.F.C.I. TYPE CIRCUIT BREAKER

NOTES: CIRCUIT BREAKERS FOR "ALTERNATE" WORK SHALL REMAIN AND ACCEPTED.

ALL NEW PANELBOARDS SCHEDULED ON THIS SHEET SHALL BE ORDERED WITH "DOOR-IN-DOOR" OPTION.

STATE OF KENTUCKY
BRIAN K. BAUMGARTLE
23159
LICENSED
PROFESSIONAL ENGINEER
10-02-13

Architecture
Engineering
Planning
815 West Market Street - Suite 300 - Louisville, Kentucky 40202
Phone: 502.584.6300 - Fax: 502.584.6307 - www.qkellc.com
Kentucky • Indiana • Georgia • West Virginia • Tennessee • Florida

MEP ENGINEERING CONSULTANTS
10411 Meeting Street
Prospect, Kentucky 40059
502.292.1411 - 502.292.1401
www.cmtasgra.com

Architect
BRAVURA
111 West Washington Street
Louisville, Kentucky 40202
T: (502) 584-9900
F: (502) 584-0829

REV #	DATE	DESCRIPTION
	05/08/2013	ISSUED FOR BID
1	05/30/2013	ADDENDUM #2: REVISED NOTES, CIRCUITING AND RISER

Job No: 155-617
Date: May 8, 2013
Scale: As Shown
Drawn By:
ISSUED FOR BID

The Parklands of Floyds Fork, Project 4A
The Strand, Turkey Run Park and Broad Run Park
Louisville, Kentucky

Owner:
21st Century Parks, Inc.
371 W. Main St., Suite 202
Louisville, Kentucky 40202

Drawing Title:
Parklands of Floyds Fork
PROJECT 4A
Silo Center
4-Hole Trailhead
Plans - Electrical

Drawing No:
E3-101

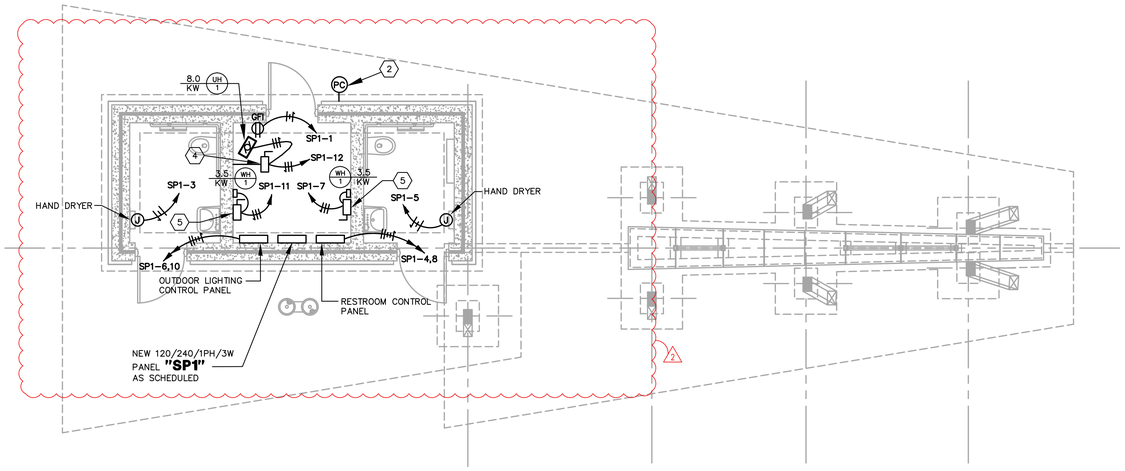

FLOOR PLAN - POWER/SYSTEMS

SCALE: 1/4" = 1'-0"

1 E1-101

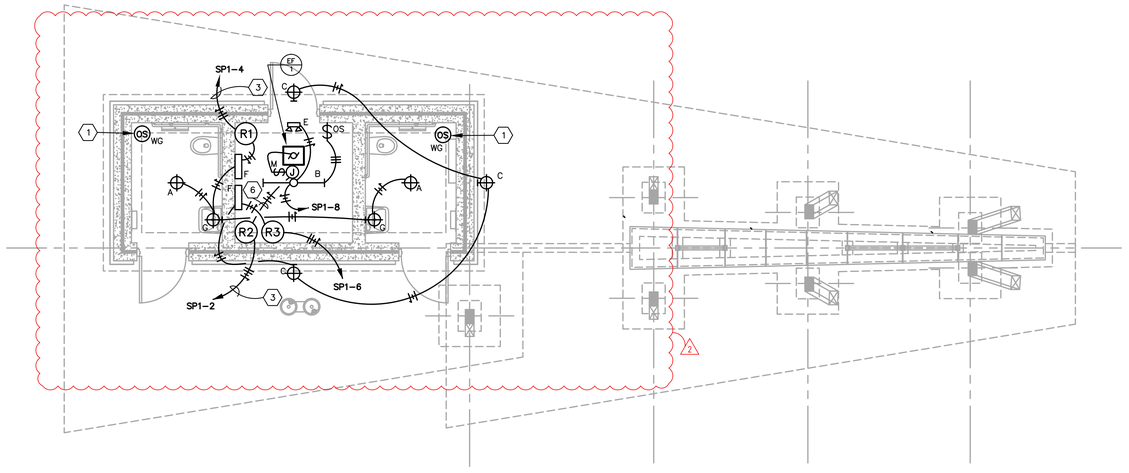

FLOOR PLAN - LIGHTING/POWER

SCALE: 1/4" = 1'-0"

2 E1-101

POWER RISER TAGGED NOTES :

1. PROVIDE METER BASE PER LG&E REQUIREMENTS.
2. PROVIDE A PARALLEL CONNECTED TRANSIENT VOLTAGE SURGE SUPPRESSOR (TVSS), CATEGORY #B. UNIT SHALL BE CURRENT TECHNOLOGY #EGPE2 80, 120/240, 1#, 3W OR APPROVED EQUAL. PROVIDE WITH OPTIONAL EVENT COUNTER. MOUNT BELOW PANEL BEING PROTECTED AS RECOMMENDED BY EQUIPMENT MANUFACTURER. ALIGN COVERS AND INSTALL WITHOUT GAP BETWEEN TVSS AND PANELBOARD.
3. PROVIDE ONE (1) #3/0 COPPER GROUNDING ELECTRODE FROM NEW GROUND BAR AT PANELBOARD "SP1" TO THREE NEW 5/8" X 10'-0" COPPERWELD GROUND RODS AS REQUIRED. CONTRACTOR SHALL TEST GROUND SYSTEM IMPEDANCE LEVEL AND IF NOT 5 Ohm, CONTRACTOR SHALL ADD GROUND RODS AS NECESSARY TO MEET THIS REQUIREMENT. GROUNDS SHALL ALSO BE CONNECTED TO BUILDING STEEL AND COLD WATER PIPING PER NEC.

POWER RISER FEEDERS :

- A: NOT USED.
- B: 3 #4/0, 1 #2 GROUND IN 2" SCHEDULE 80 PVC CONDUITS (SCHEDULE #80 PVC WHERE EXPOSED AND FOR ELLS) WITH ONE ADDITIONAL EMPTY 2" SPARE CONDUIT. MINIMUM BURY AT 42".
- C: 1 #3/0, BARE COPPER GROUND (ROUTE IN 1-1/4" CONDUIT WHERE EXPOSED).
- D: 1 #3/0, BARE COPPER GROUND (ROUTE IN 1" CONDUIT WHERE EXPOSED).
- E: 3 #8, 1 #10 GROUND IN 3/4" CONDUIT.
- F: NOT USED.

POWER RISER GENERAL NOTES :

- ALL CONDUCTORS SHALL BE COPPER (SEE SPECIFICATIONS FOR TYPES).
- REFER TO DETAIL FOR TYPICAL PANEL LABELING REQUIREMENTS.
- AS PART OF THIS CONTRACT, PROVIDE A COORDINATION/FAULT CURRENT STUDY FOR BREAKERS ON THIS PROJECT. STUDY SHALL INCLUDE ALL MAINS AND FEEDERS SHOWN ON THESE DRAWINGS AND SHALL EXTEND TO THE MAIN LUGS OR BREAKER OF THE FURTHEST DEVICE DOWNSTREAM SUBMIT AS SHOP DRAWING TO ENGINEER PRIOR TO ORDERING ANY POWER DISTRIBUTION EQUIPMENT.
- AS PART OF THIS CONTRACT, PROVIDE A COMPREHENSIVE ARC FLASH HAZARD ANALYSIS FOR POWER DISTRIBUTION DEVICES ON THIS PROJECT. PROVIDE ALL LABELS, WARNING SIGNAGE, ETC. PER NPFA-70E AND OSHA REQUIREMENTS.

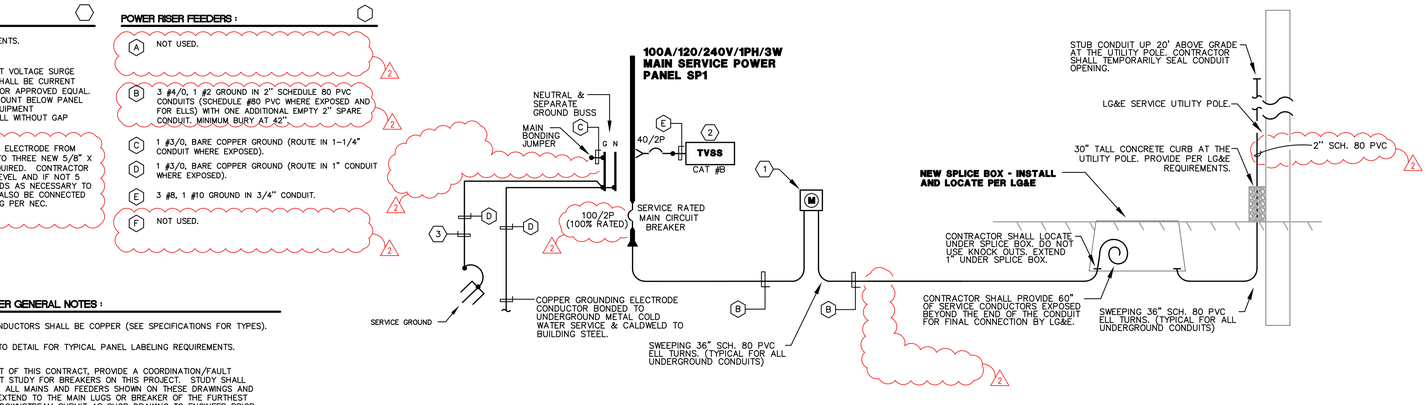

POWER DISTRIBUTION RISER DIAGRAM

NO SCALE

3 E1-101

GENERAL NOTES (LIGHTING/POWER/SYSTEMS) :

- REFER TO THE ARCHITECT'S REFLECTED CEILING PLANS FOR EXACT LOCATIONS OF ALL CEILING MOUNTED LIGHT FIXTURES, ETC. REFER ALSO TO THE ARCHITECT'S CASEWORK DETAILS AND ROOM ELEVATIONS FOR EXACT LOCATIONS AND MOUNTING HEIGHTS OF LIGHT FIXTURES, ETC.
- ALL NEW WIRING SHALL BE #12 WITH A #12 INSULATED GROUND WIRE (U.O.N.). CONDUIT SHALL BE 3/4" MINIMUM. PROVIDE #10 FOR 120V AC BRANCH CIRCUITS OVER 50 FEET IN LENGTH.
- CONTRACTOR SHALL FOLLOW BRANCH CIRCUITING LAY-OUT, AS INDICATED ON THE FLOOR PLANS, WITH A MAXIMUM OF THREE (3) BRANCH CIRCUITS PER HOMERUN. EACH BRANCH CIRCUIT SHALL BE PROVIDED WITH A DEDICATED NEUTRAL CONDUCTOR. DEDICATED NEUTRAL CONDUCTORS SHALL BE CONSIDERED CURRENT CARRYING. IF ADDITIONAL CONDUCTORS ARE ROUTED IN THE SAME CONDUIT WITH THOSE INDICATED, CONTRACTOR SHALL DE-RATE ALL CURRENT CARRYING CONDUCTORS PER N.E.C. #310.15(B)(2), AND UPSIZE CONDUIT AS REQUIRED PER N.E.C. #300.17 AND ANNEX C. MULTIWIRE BRANCH CIRCUITS AS DEFINED IN N.E.C #100 / 210.4 (CIRCUITS SHARING A COMMON NEUTRAL CONDUCTOR) SHALL NOT BE PERMITTED.
- CONTRACTOR SHALL REVIEW ALL ARCHITECTURAL ELEVATIONS FOR MOUNTING HEIGHTS AND LOCATIONS OF ALL WALL MOUNTED DEVICES.
- ELECTRICAL EQUIPMENT LAYOUT IS DIAGRAMATIC ONLY. SUBMIT COORDINATION DRAWINGS FOR APPROVAL PRIOR TO INSTALLATION.
- ALL EXPOSED CONDUIT SHALL BE PAINTED RIGID STEEL (GRS). GRS SHALL HAVE 1 COAT OF PRIMER AND 2 COATES OF PAINT. PAINT FINISH SHALL BE SELECTED BY THE ARCHITECT.

TAGGED NOTES :

1. INSTALL OCCUPANCY SENSOR ON CEILING WITH WIRE GUARD. WIREGUARD TO BE PAINTED TO MATCH CEILING. WIREGUARD TO BE MOUNTED WITH STAINLESS STEEL TORK HEAD SCREWS.
2. BUILDING MOUNTED PHOTOCELL. REFER TO ARCHITECTURAL ELEVATIONS FOR LOCATION AND SHEET E1-001 FOR FURTHER REQUIREMENTS
3. ROUTE UNSWITCHED HOT TO BATTERY BACK-UP INVERTER. ROUTE SWITCHED HOT THROUGH CONTACTOR PER DETAIL ON SHEET #E1-001.
4. PROVIDE FUSIBLE 60A/250V/2P HEAVY-DUTY DISCONNECT SWITCH IN NEMA-1 ENCLOSURE FOR CONNECTION TO WATER HEATER AS INDICATED. COORDINATE EXACT MOUNTING LOCATION AND CONNECTION REQUIREMENTS WITH MECHANICAL CONTRACTOR PRIOR TO ROUGH-IN. FUSE DISCONNECT SWITCH PER EQUIPMENT NAMEPLATE RATING. PROVIDE UNISTRUT AS REQUIRED FOR MOUNTING OF DISCONNECT SWITCH. FUSE PER UNIT NAMEPLATE
5. PROVIDE FUSIBLE 30A/250V/2P HEAVY-DUTY DISCONNECT SWITCH IN NEMA-1 ENCLOSURE FOR CONNECTION TO WATER HEATER AS INDICATED. COORDINATE EXACT MOUNTING LOCATION AND CONNECTION REQUIREMENTS WITH MECHANICAL CONTRACTOR PRIOR TO ROUGH-IN. FUSE DISCONNECT SWITCH PER EQUIPMENT NAMEPLATE RATING. PROVIDE UNISTRUT AS REQUIRED FOR MOUNTING OF DISCONNECT SWITCH. FUSE PER UNIT NAMEPLATE
6. ROUTE BRANCH CIRCUIT THROUGH CONTACTOR PER DETAIL ON SHEET E1-001.

PANELBOARD AND WIRING SCHEDULE

PANELBOARD: SP1 AMPERES: 100 VOLTAGE: 120/240 PHASE: 1 WIRE: 3 MANUF.: SQUARE D TYPE: NQOD (30-POLE)

GND	CON	LOAD A	LOAD B	DESIGNATION	WIRE	BKR	CKT	CKT	BKR	WIRE	DESIGNATION	LOAD A	LOAD B	CON	GND
12	3/4"	0.2		MECH ROOM - RCP	12	20/1	1	2	20/1	12	EF - 1	0.5		3/4"	12
10	3/4"		2.3	HAND DRYER	10	30/1	3	4	20/1	12	REST ROOM - LTG		0.1	3/4"	12
10	3/4"	2.3		HAND DRYER	10	30/1	5	6	20/1	12	BLDG. MTD. EXT. LTG	0.2		3/4"	12
12	3/4"		1.8	WATER HEATER	12	20/2	7	8	20/1	12	MECH ROOM - LTG		0.1	3/4"	12
		1.8					9	10	20/1	10	SITE - LTG	1.0		3/4"	10
12	3/4"		1.8	WATER HEATER	12	20/2	11	12	45/2	8	EUH - 1		4.0	3/4"	8
		1.8					13	14				4.0			
12	3/4"		0.2	LTG CONTROLS	12	20/1	15	16	20/1		SPARE				
				SPARE		20/1	17	18	20/1		SPARE				
				SPARE		20/1	19	20	20/1		SPARE				
				SPARE		20/1	21	22	20/1		SPARE				
				SPARE		20/1	23	24	20/1		SPARE				
				SPARE		20/1	25	26	20/1		SPARE				
				SPARE		20/1	27	28	*	*	TVSS			*	*
				SPARE		20/1	29	30							
		6.1	6.1	SUB-TOTAL KVA							KVA SUB-TOTAL	5.7	4.2	22.1	
											KVA GROSS-TOTAL	11.8	10.3		

EMERGENCY POWER: NO
BRANCH:
MAIN BREAKER:100/2P
MAIN LUGS:
A.I.C. RATING: 65,000

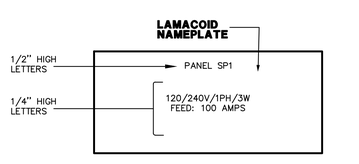

TYPICAL POWER PANEL NAMEPLATE DETAIL

NO SCALE

LABELS SHALL BE BLACK WITH WHITE LETTERS. UTILIZE SCREW-ON TYPE LAMACOID PLATE

PANELBOARD SCHEDULE NOTES :

- *: REFER TO POWER RISER FOR SIZES. BE LABELLED AS SPARES IF THE PROJECT ALTERNATES ARE NOT
- GFI: PROVIDE G.F.C.I. TYPE CIRCUIT BREAKER
- NOTES: CIRCUIT BREAKERS FOR "ALTERNATE" WORK SHALL REMAIN AND ACCEPTED.

ALL NEW PANELBOARDS SCHEDULED ON THIS SHEET SHALL BE ORDERED WITH "DOOR-IN-DOOR" OPTION.

STATE OF KENTUCKY
BRIAN K. BAUMGARTLE
23159
LICENSED PROFESSIONAL ENGINEER
THIS DOCUMENT HAS BEEN DIGITALLY SIGNED AND SEALED BY BRIAN K. BAUMGARTLE ON THE DATE ADJACENT TO THE SEAL. PRINTED COPIES OF THIS DOCUMENT ARE NOT CONSIDERED SIGNED AND SEALED AND THE SIGNATURE MUST BE VERIFIED ON ANY ELECTRONIC COPIES.

Architecture
Engineering
Planning
QK4
815 West Market Street, Suite 300, Louisville, Kentucky 40202
Phone: (502) 561-2222 Fax: (502) 561-2233 e-mail: info@qk4.com
Kentucky • Indiana • Georgia • West Virginia • Tennessee • Florida

MEP ENGINEERING CONSULTANTS
10411 Meeting Street,
Prospect, Kentucky 40059
502.292.1661 fax 502.292.0691
www.cmtaes.com

Architect
BRAVURA
111 West Washington Street
Louisville, Kentucky 40202
T: (502) 584-9900
F: (502) 584-0829

The Parklands of Floyds Fork, Project 4A
The Strand, Turkey Run Park and Broad Run Park
Louisville, Kentucky

Owner:
21st Century Parks, Inc.
371 W. Main St. Suite 202
Louisville, Kentucky 40202

REV #	DATE	DESCRIPTION
	05/09/2013	ISSUED FOR BID
1	05/23/2013	ADDENDUM #1: REVISED TITLE TO READ, "ADD-ALT NO.2"
2	05/30/2013	ADDENDUM #2: REVISED NOTES, CIRCUITING AND RISER

Job No: 155-617
Date: May 23, 2013
Scale: As Shown
Drawn By:
ISSUED FOR ADDENDUM #1

Drawing Title:
1 Parklands of Floyds Fork
ADD-ALT NO. 2
PROJECT 4A
The Strand
2-Hole Trailhead
Plans - Electrical

Drawing No:
E1-101

Seals

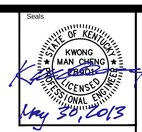

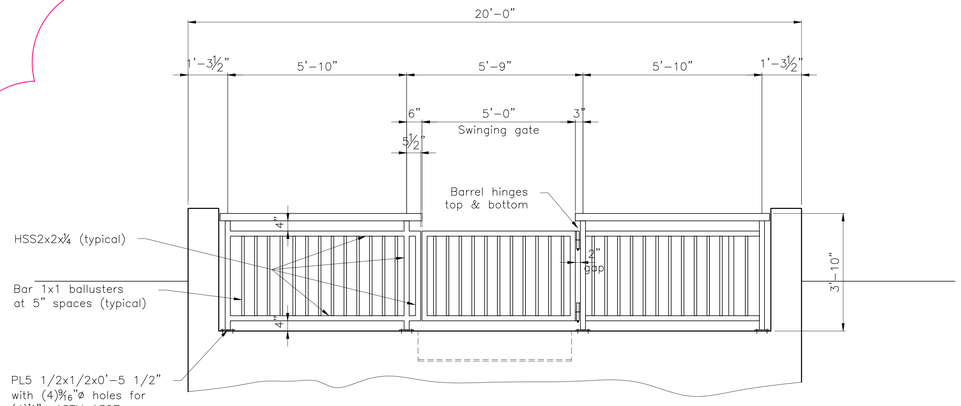

GATE ELEVATION

SCALE: 1/2"=1'-0"

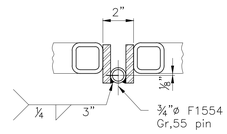

HINGE PLAN

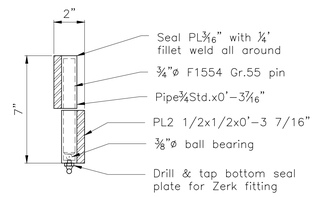

HINGE ELEVATION

SCALE: 3"=1'-0"

OPAC Consulting Engineers
315 Bay Street, Second Floor
San Francisco, CA 94945
(415)989-4551
www.opacengineers.com

LANDSCAPE ARCHITECT
WRT
Wallace Roberts & Todd, LLC
1700 Market Street
28th Floor
Philadelphia, PA 19103
tel 215.732.5215
fax 215.732.2351

Architect
BRAVURA
111 West Washington Street
Louisville, Kentucky 40202
T. (502) 584-6000
F. (502) 584-6829

The Parklands of Floyds Fork, Project 4A
The Strand, Turkey Run Park and Broad Run
Louisville, Kentucky

Owner:
21st Century Parks, Inc.
371 W. Main St., Suite 202
Louisville, Kentucky 40202

REV #	DATE	DESCRIPTION
1	05/30/2013	ADDENDUM #2: ARCHITECTURAL REVISIONS

Job No:	12300.4AC
Date:	May 30, 2013
Scale:	As Noted
Drawn By:	L.Chien

ISSUED FOR ADDENDUM #2

Drawing Title:

Parklands of Floyds Fork

ADD-ALT. NO.1
PROJECT 4A
Gate and Details

Drawing No:

BR-S721

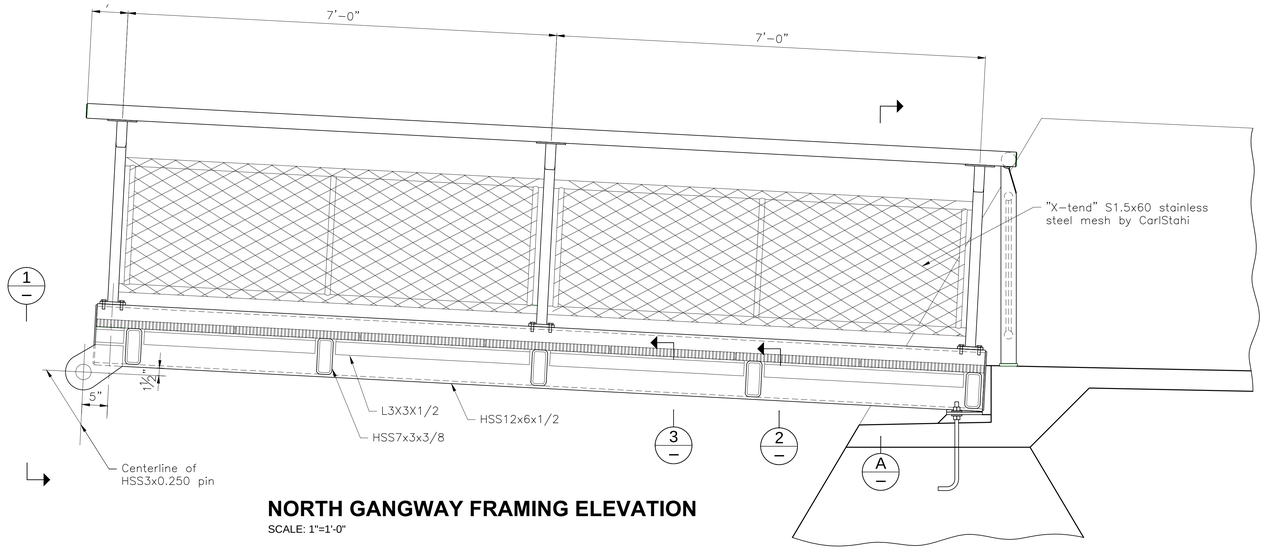

NORTH GANGWAY FRAMING ELEVATION

SCALE: 1"=1'-0"

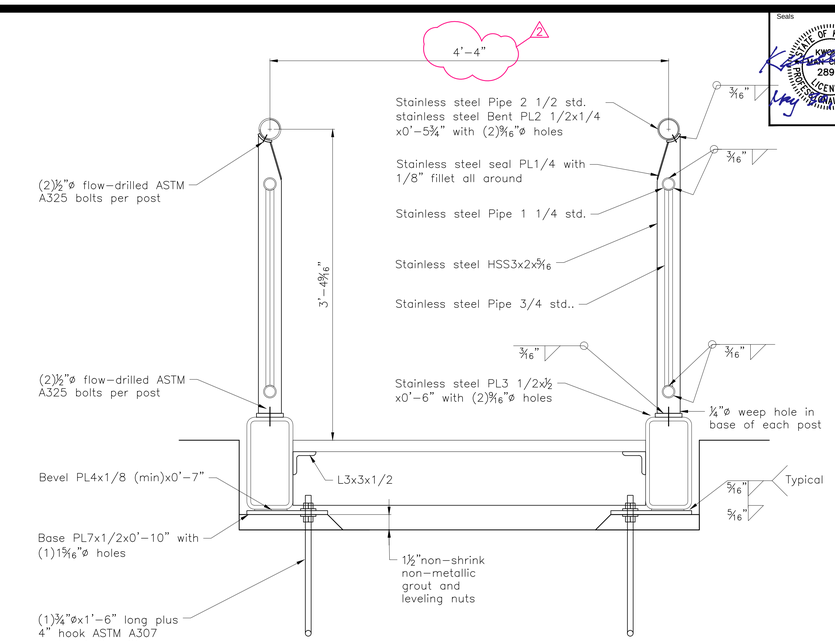

NORTH GANGWAY SECTION

SCALE: 1 1/2"=1'-0"

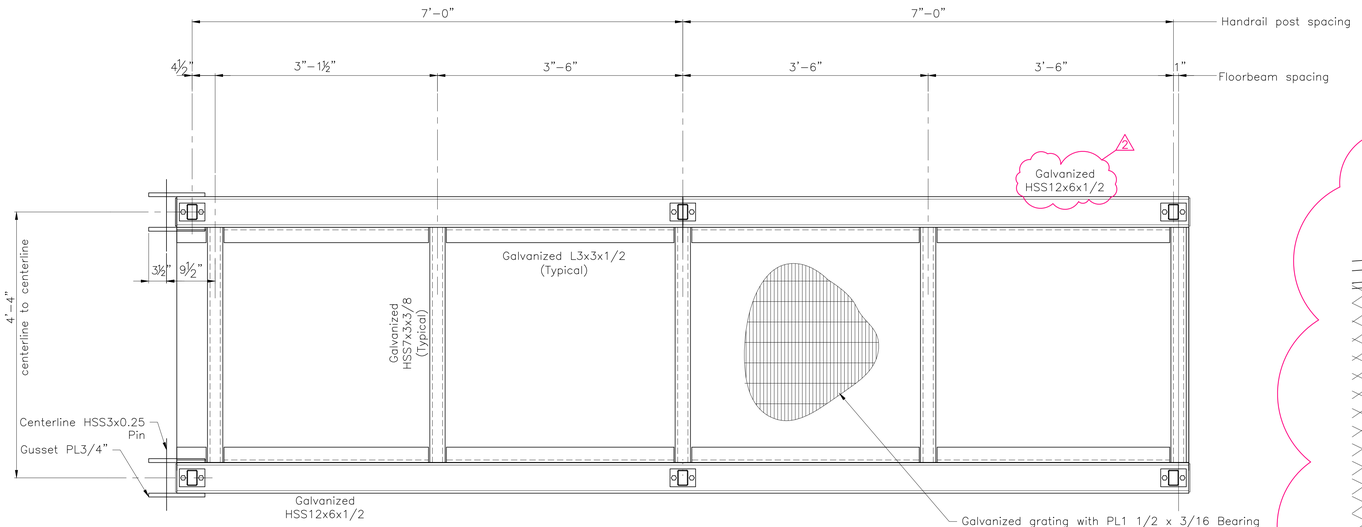

NORTH GANGWAY FRAMING PLAN

SCALE: 1"=1'-0"

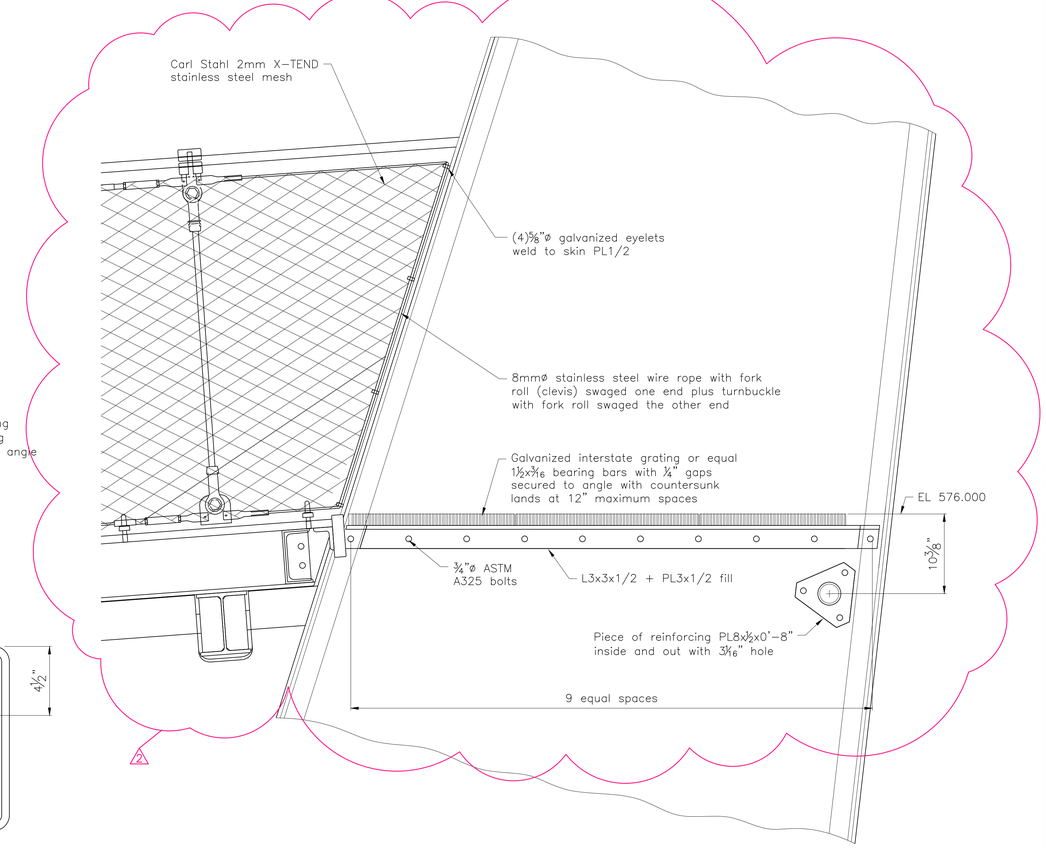

NORTH ARMATURE LANDING SECTION

SCALE: 1 1/2"=1'-0"

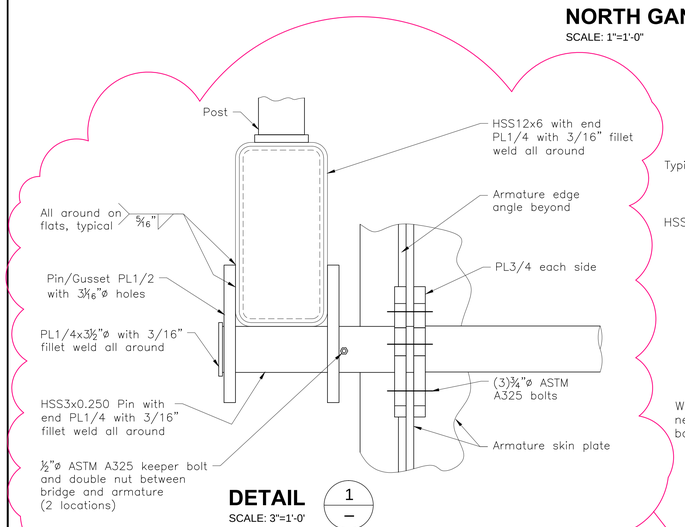

DETAIL 1

SCALE: 3"=1'-0"

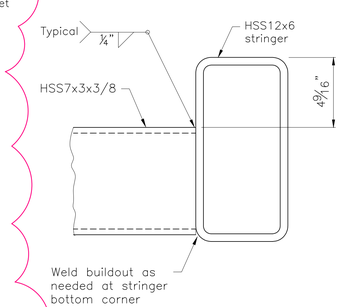

DETAIL 2

SCALE: 3"=1'-0"

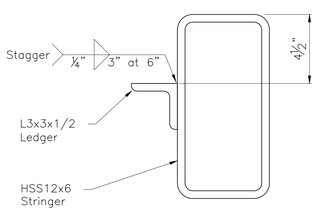

DETAIL 3

SCALE: 3"=1'-0"

NOTE:

For details not shown, use similar details from BR-S718.

Seals

KENTUCKY
KWONG KWAN CHENG
28901
LICENSED PROFESSIONAL ENGINEER

OPAC Consulting Engineers
315 Bay Street, Second Floor
San Francisco, CA 94945
(415)989-4551
www.opacengineers.com

LANDSCAPE ARCHITECT
Wallace Roberts & Todd, LLC
1700 Market Street
28th Floor
Philadelphia, PA 19103
tel 215.732.5215
fax 215.732.2351

Architect
BRAVURA
111 West Washington Street
Louisville, Kentucky 40202
T: (502) 584.0800
F: (502) 584.0829

The Parklands of Floyds Fork, Project 4A
The Strand, Turkey Run Park and Broad Run
Louisville, Kentucky

Owner:
21st Century Parks, Inc.
371 W. Main St., Suite 202
Louisville, Kentucky 40202

REV #	DATE	DESCRIPTION
	05/08/2013	ISSUED FOR BID
1	05/23/2013	ADDENDUM #1, CORRECTIONS AND REVISED HANDRAIL
2	05/30/2013	ADDENDUM #2, ARCHITECTURAL REVISIONS

Job No:	12300.4AC
Date:	May 30, 2013
Scale:	As Noted
Drawn By:	L.Chien

ISSUED FOR ADDENDUM #2

Drawing Title:

Parklands of Floyds Fork

ADD-ALT. NO.1
PROJECT 4A
North Walls and Gangplank - 2

Drawing No:

BR-S720

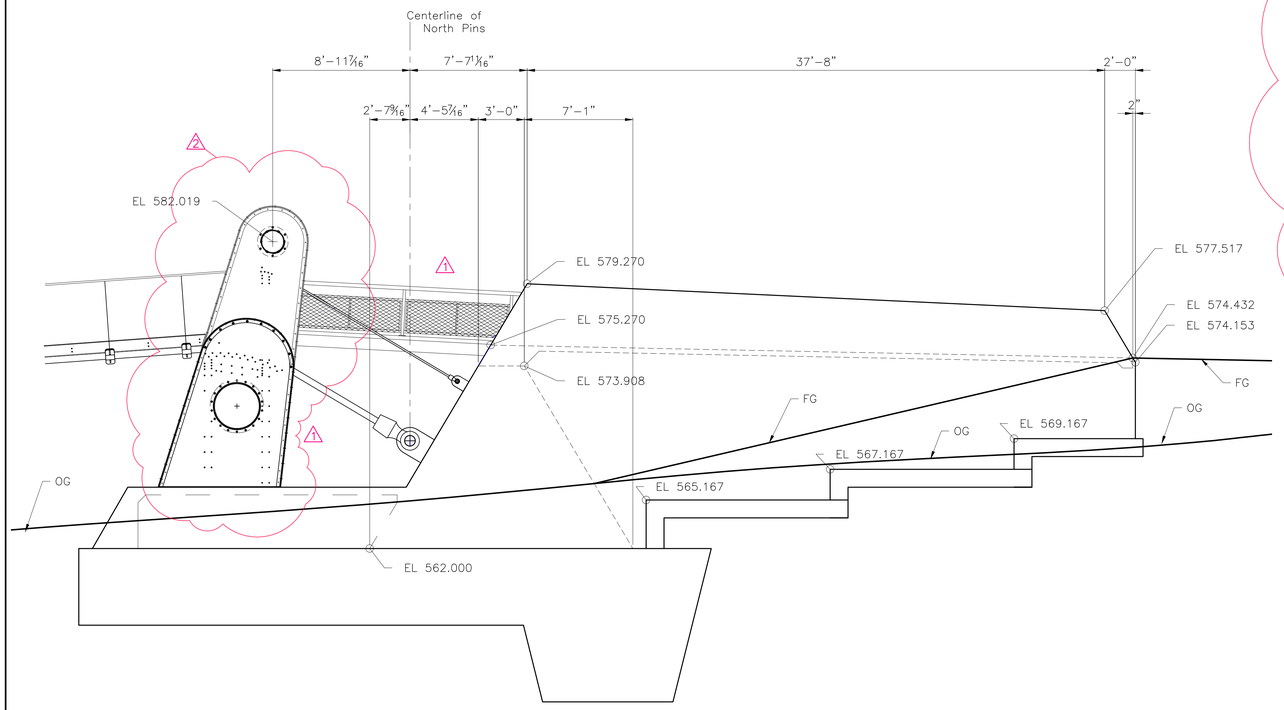

NORTH ANCHORAGE EAST ELEVATION

SCALE: 1/4"=1'-0"

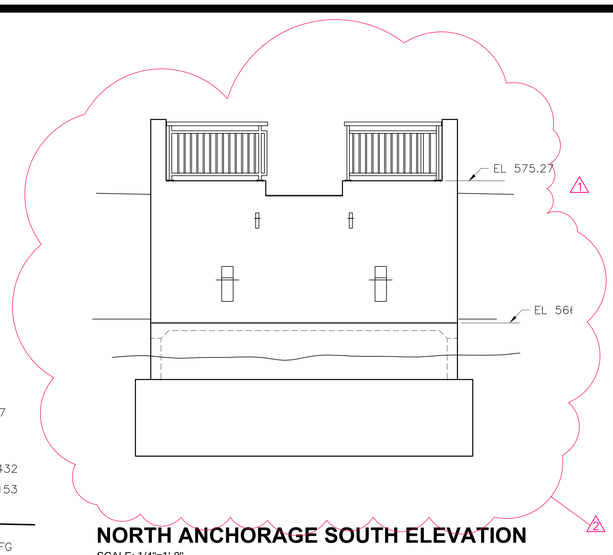

NORTH ANCHORAGE SOUTH ELEVATION

SCALE: 1/4"=1'-0"

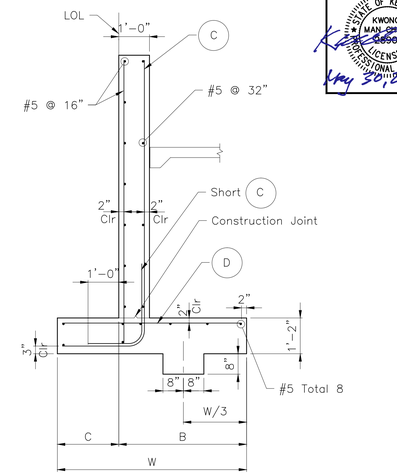

6' SPREAD FOOTING SECTION C

SCALE: 1/2"=1'-0"

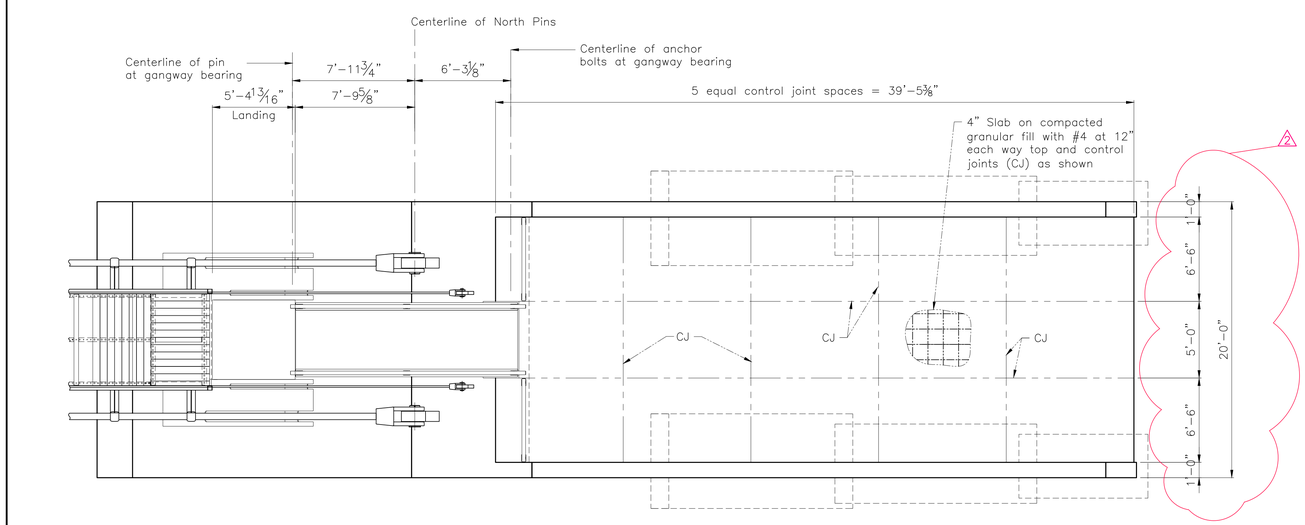

NORTH ANCHORAGE PLAN

SCALE: 1/4"=1'-0"

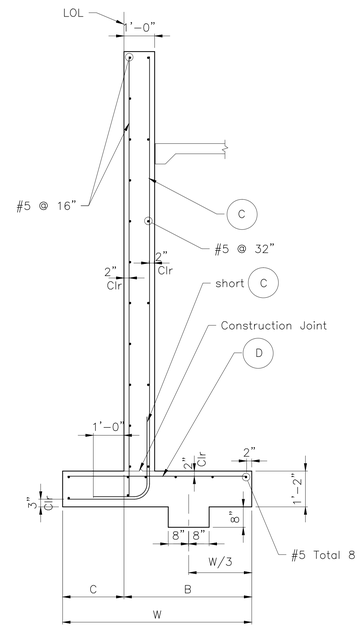

10' SPREAD FOOTING SECTION A

SCALE: 1/2"=1'-0"

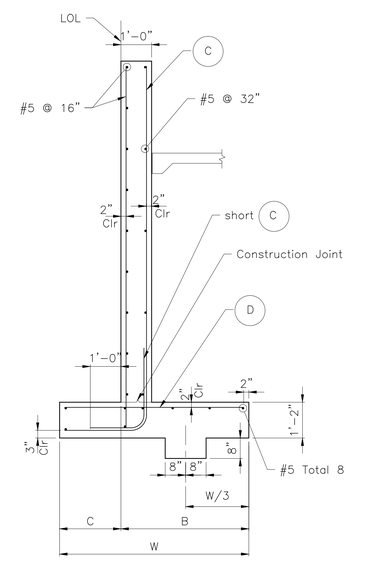

8' SPREAD FOOTING SECTION B

SCALE: 1/2"=1'-0"

TABLE OF REINFORCING STEEL DIMENSIONS AND DATA			
Design H	6'	8'	10'
W	4'-2"	5'-2"	6'-2"
C	1'-4"	1'-8"	2'-0"
B	2'-10"	3'-6"	4'-2"
(c) bars	# 5 @ 16	# 5 @ 8	# 6 @ 8
(d) bars	# 5 @ 16	# 5 @ 16	# 5 @ 8
Total (e) bars	6 - #6	6 - #6	6 - #8
Total (f) bars	6 - #6	6 - #6	6 - #6

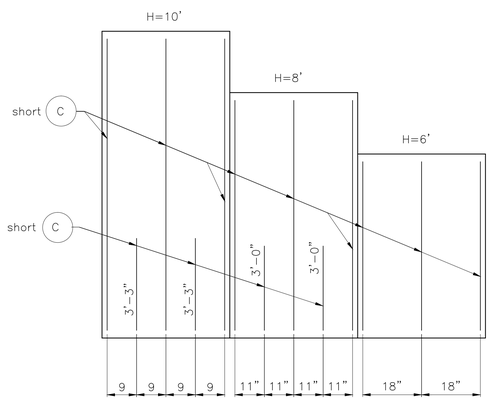

ELEVATION

SCALE: 1/2"=1'-0"

Seals

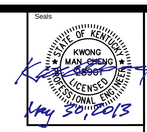

OPAC Consulting Engineers
315 Bay Street, Second Floor
San Francisco, CA 94945
(415)989-4551
www.opacengineers.com

LANDSCAPE ARCHITECT
WRT
Wallace Roberts & Todd, LLC
1700 Market Street
28th Floor
Philadelphia, PA 19103
tel 215.732.5215
fax 215.732.2351

Architect
BRAVURA
111 West Washington Street
Louisville, Kentucky 40202
T. (502) 584-6000
F. (502) 584-6829

The Parklands of Floyds Fork, Project 4A
The Strand, Turkey Run Park and Broad Run
Louisville, Kentucky

Owner:
21st Century Parks, Inc.
371 W. Main St., Suite 202
Louisville, Kentucky 40202

REV #	DATE	DESCRIPTION
	05/08/2013	ISSUED FOR BID
1	05/23/2013	ADDENDUM #1: CORRECTIONS AND REVISED HANDRAIL
2	05/30/2013	ADDENDUM #2: ARCHITECTURAL REVISIONS

Job No: 12300.4AC
Date: May 30, 2013
Scale: As Noted
Drawn By: L.Chien
ISSUED FOR ADDENDUM #2

Drawing Title:
Parklands of Floyds Fork
ADD-ALT. NO.1
PROJECT 4A
North Walls and Gangplank-1

Drawing No:
BR-S719

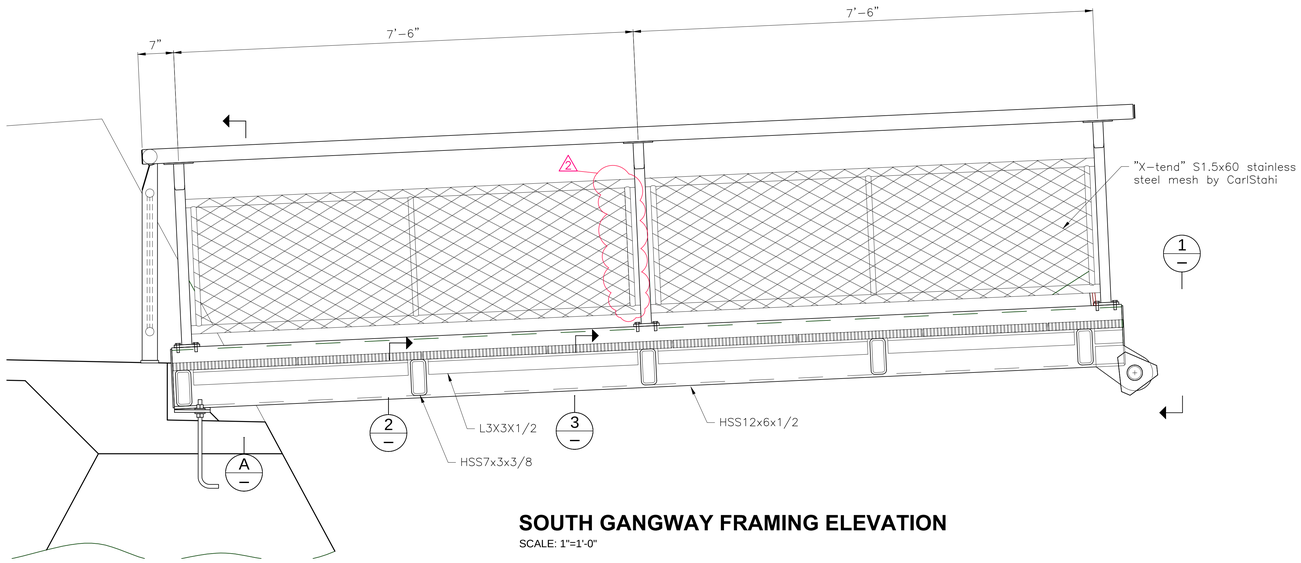

SOUTH GANGWAY FRAMING ELEVATION

SCALE: 1"=1'-0"

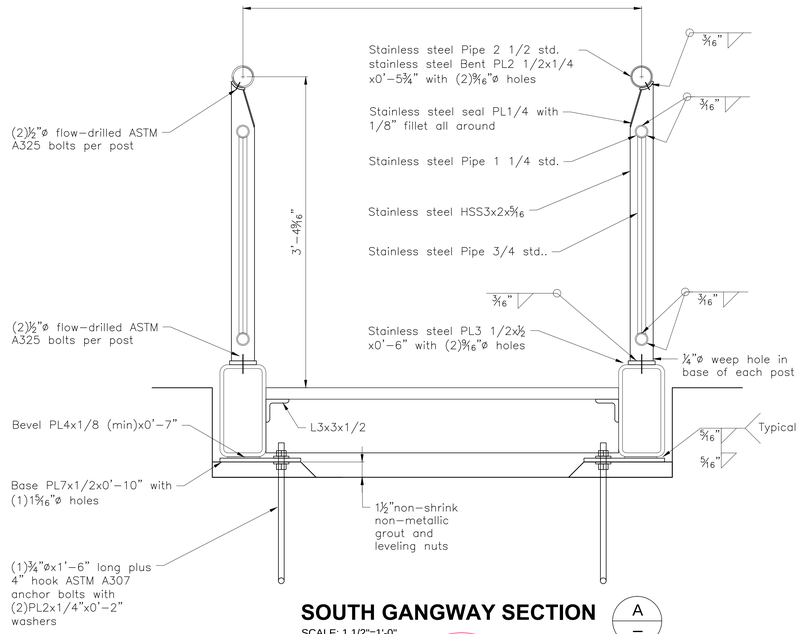

SOUTH GANGWAY SECTION

SCALE: 1 1/2"=1'-0"

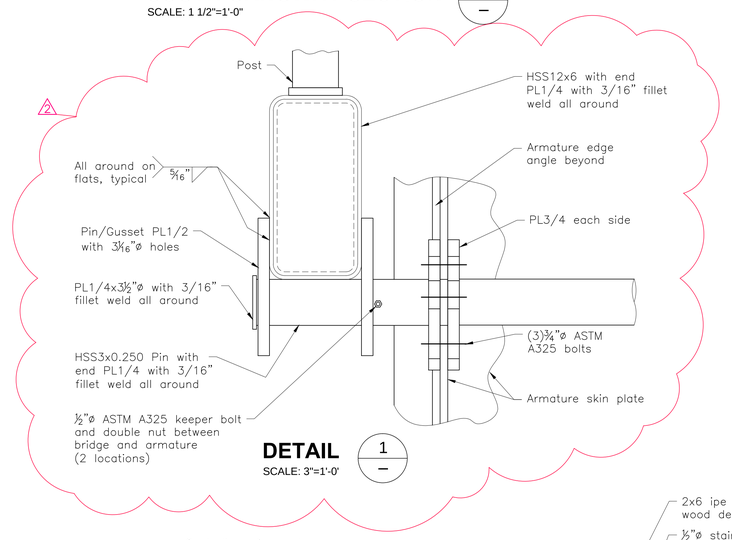

DETAIL 1

SCALE: 3"=1'-0"

SOUTH GANGWAY FRAMING PLAN

SCALE: 1"=1'-0"

SOUTH ARMATURE LANDING SECTION

SCALE: 1 1/2"=1'-0"

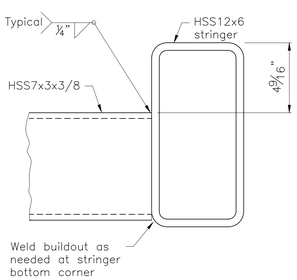

DETAIL 2

SCALE: 3"=1'-0"

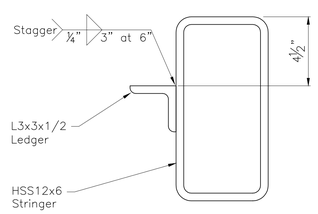

DETAIL 3

SCALE: 3"=1'-0"

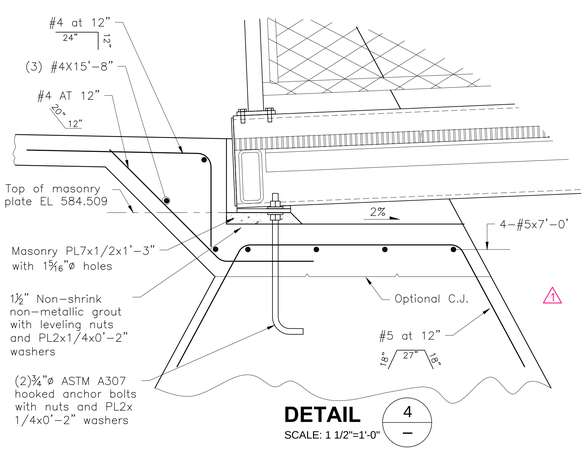

DETAIL 4

SCALE: 1 1/2"=1'-0"

NOTE:

1 For details not shown, use similar details from BR-S720.

Seals

KWONG MAN CHENG — LICENSED PROFESSIONAL ENGINEER — STATE OF KENTUCKY

May 30, 2013

OPAC Consulting Engineers
315 Bay Street, Second Floor
San Francisco, CA 94945
(415)989-4551
www.opacengineers.com

LANDSCAPE ARCHITECT
Wallace Roberts & Todd, LLC
1700 Market Street
28th Floor
Philadelphia, PA 19103
tel 215.732.5215
fax 215.732.2351

Architect
BRAVURA
111 West Washington Street
Louisville, Kentucky 40202
T: (502) 584-0900
F: (502) 584-0829

The Parklands of Floyds Fork, Project 4A
The Strand, Turkey Run Park and Broad Run
Louisville, Kentucky

Owner:
21st Century Parks, Inc.
371 W. Main St., Suite 202
Louisville, Kentucky 40202

REV #	DATE	DESCRIPTION
	05/08/2013	ISSUED FOR BID
1	05/23/2013	ADDENDUM #1: CORRECTIONS AND REVISED HANDRAIL
2	05/30/2013	ADDENDUM #2: ARCHITECTURAL REVISIONS

Job No:	12300.4AC
Date:	May 30, 2013
Scale:	As Noted
Drawn By:	L.Chien

ISSUED FOR ADDENDUM #2

Drawing Title:

Parklands of Floyds Fork

ADD-ALT. NO.1
PROJECT 4A
South Walls and Gangplank - 2

Drawing No:

BR-S718

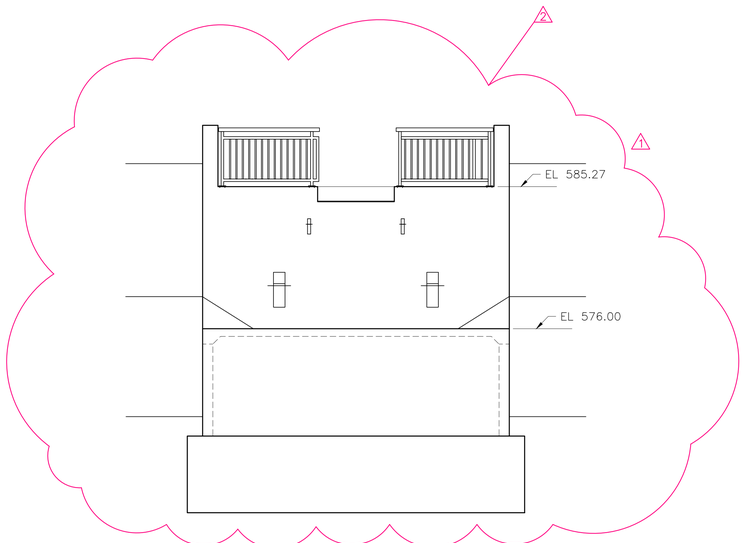

SOUTH ANCHORAGE NORTH ELEVATION

SCALE: 1/4"=1'-0"

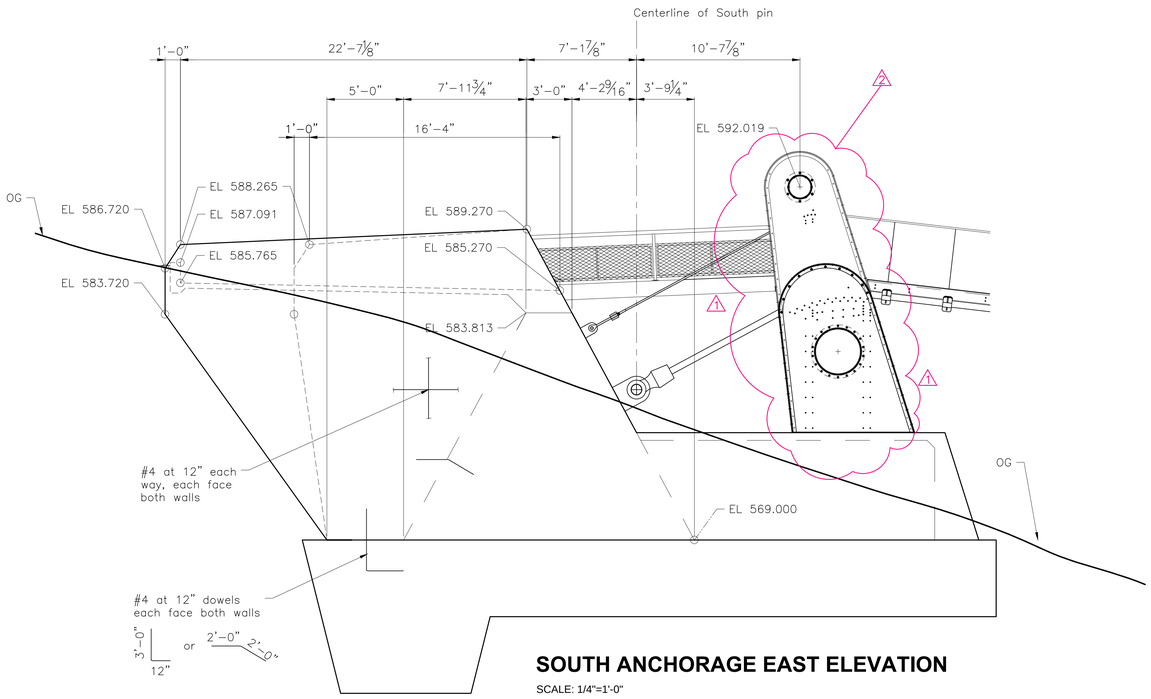

SOUTH ANCHORAGE EAST ELEVATION

SCALE: 1/4"=1'-0"

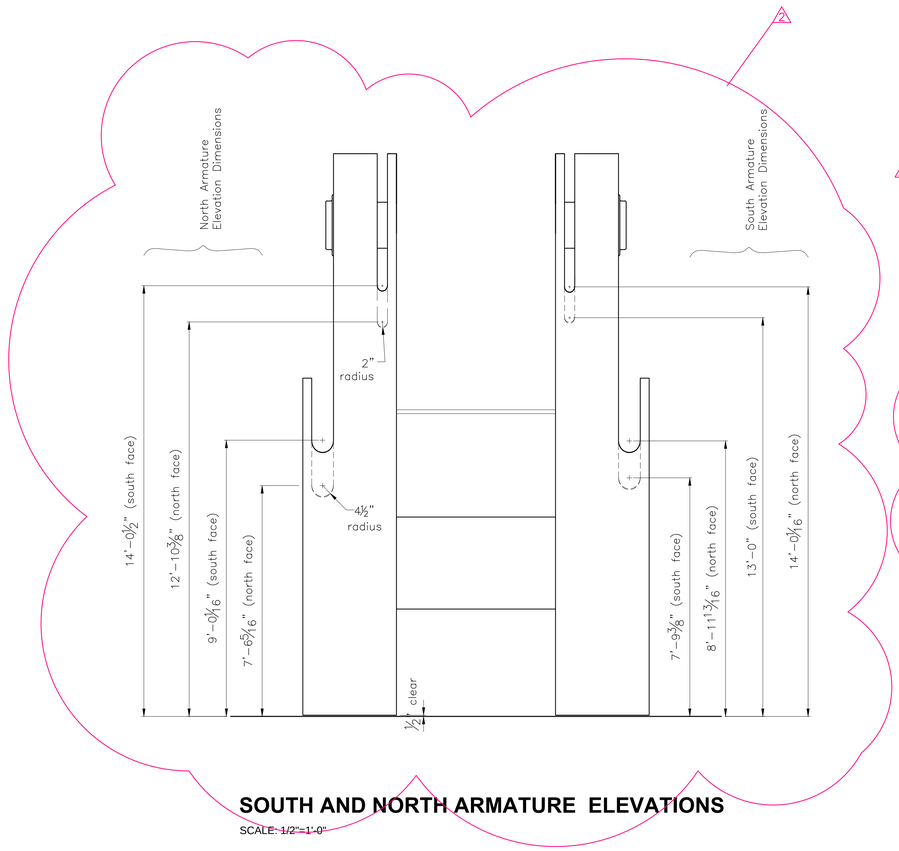

SOUTH AND NORTH ARMATURE ELEVATIONS

SCALE: 1/2"=1'-0"

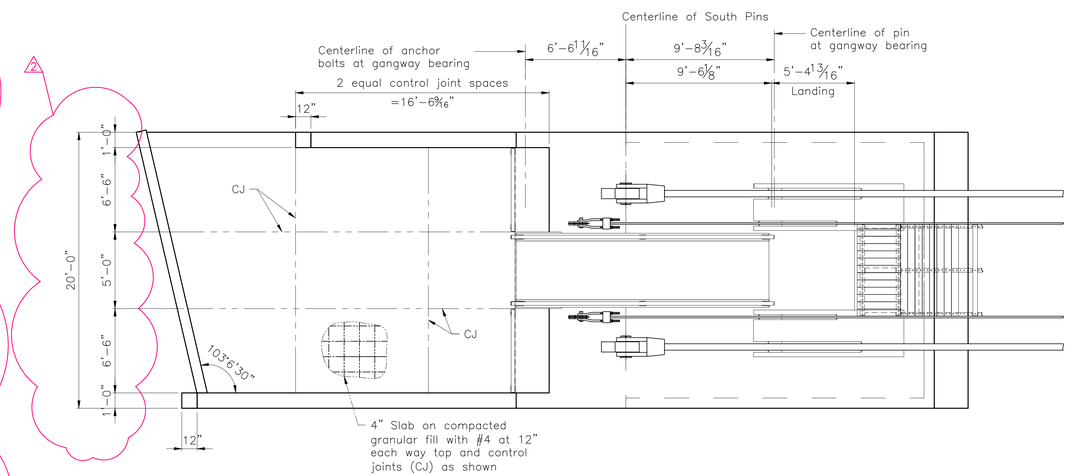

SOUTH ANCHORAGE PLAN

SCALE: 1/4"=1'-0"

Seals

STATE OF KENTUCKY
KWONG MAN CHENG
25001
LICENSED PROFESSIONAL ENGINEER
May 31, 2013

OPAC Consulting Engineers
315 Bay Street, Second Floor
San Francisco, CA 94945
(415)989-4551
www.opacengineers.com

LANDSCAPE ARCHITECT
WRT
Wallace Roberts & Todd, LLC
1700 Market Street
28th Floor
Philadelphia, PA 19103
tel 215.732.5215
fax 215.732.2351

Architect
BRAVURA
111 West Washington Street
Louisville, Kentucky 40202
T. (502) 584.0900
F. (502) 584.0829

The Parklands of Floyds Fork, Project 4A
The Strand, Turkey Run Park and Broad Run
Louisville, Kentucky

Owner:
21st Century Parks, Inc.
371 W. Main St. Suite 202
Louisville, Kentucky 40202

REV #	DATE	DESCRIPTION
	05/08/2013	ISSUED FOR BID
1	05/23/2013	ADDENDUM #1: CORRECTIONS AND REVISED HANDRAIL
2	05/30/2013	ADDENDUM #2: ARCHITECTURAL REVISIONS

Job No:	12300.4AC
Date:	May 30, 2013
Scale:	As Noted
Drawn By:	L.Chien

ISSUED FOR ADDENDUM #2

Drawing Title:

Parklands of Floyds Fork

ADD-ALT. NO.1
PROJECT 4A
South Walls and Gangplank - 1

Drawing No:

BR-S717

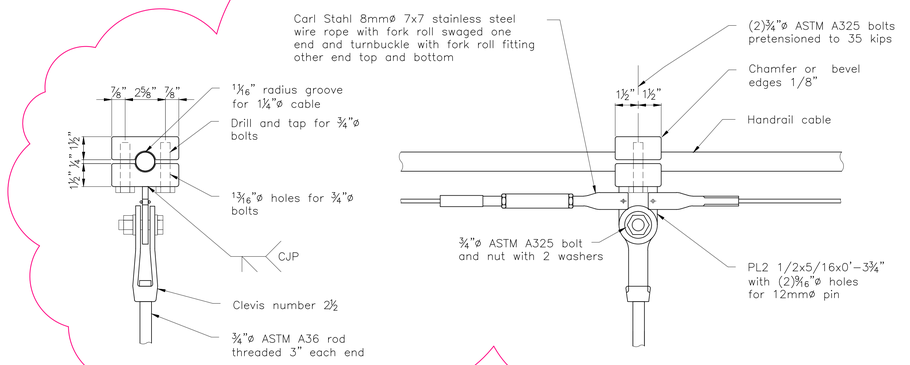

HANDRAIL CLAMP DETAILS

SCALE: 3"=1'-0"

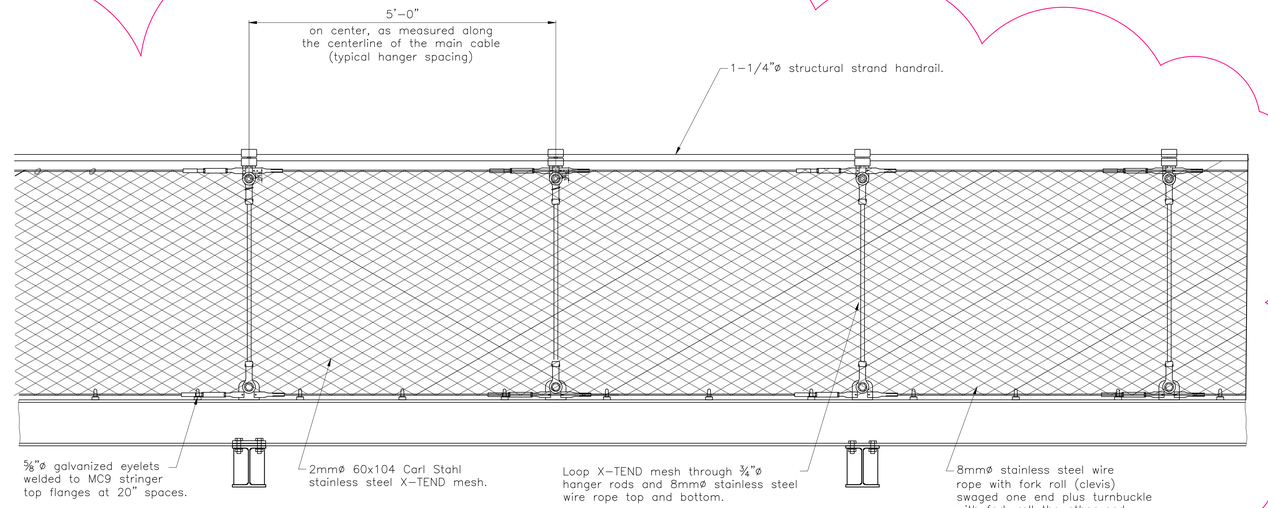

HANDRAIL ELEVATION

SCALE: 1"=1'-0"

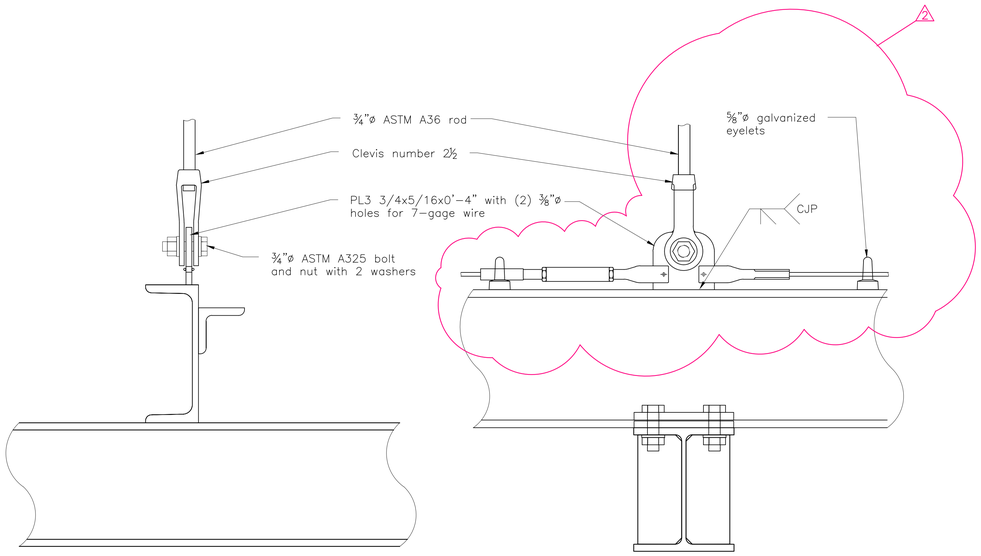

HANDRAIL TO STRINGER CONNECTION DETAILS

SCALE: 3"=1'-0"

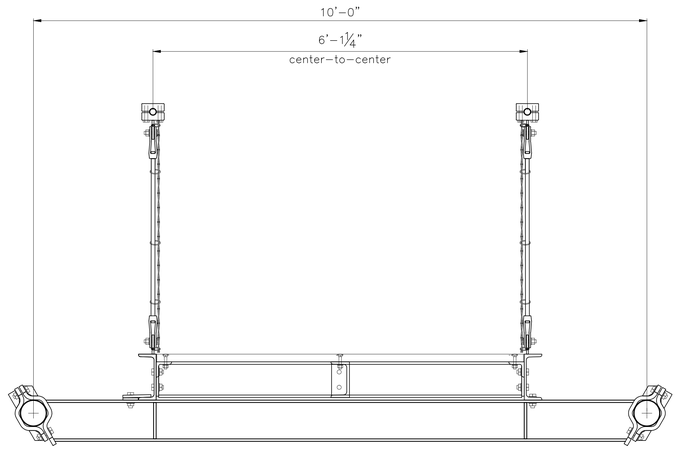

HANDRAIL SECTION

SCALE: 1"=1'-0"

Seals

OPAC Consulting Engineers
315 Bay Street, Second Floor
San Francisco, CA 94945
(415)989-4551
www.opacengineers.com

LANDSCAPE ARCHITECT
Wallace Roberts & Todd, LLC
1700 Market Street
28th Floor
Philadelphia, PA 19103
tel 215.732.5215
fax 215.732.2351

Architect
BRAVURA
111 West Washington Street
Louisville, Kentucky 40202
T. (502) 584.6828
F. (502) 584.6829

The Parklands of Floyds Fork, Project 4A
The Strand, Turkey Run Park and Broad Run
Louisville, Kentucky

Owner:
21st Century Parks, Inc.
371 W. Main St., Suite 202
Louisville, Kentucky 40202

REV #	DATE	DESCRIPTION
	05/09/2013	ISSUED FOR BID
1	05/23/2013	ADDENDUM #1: CORRECTIONS AND REVISED HANDRAIL
2	05/30/2013	ADDENDUM #2: ARCHITECTURAL REVISIONS

Job No: 12300.4AC
Date: May 30, 2013
Scale: As Noted
Drawn By: L.Chien

ISSUED FOR ADDENDUM #2

Drawing Title:
Parklands of Floyds Fork
ADD-ALT. NO.1
PROJECT 4A
Handrail Cable and Details

Drawing No:
BR-S716

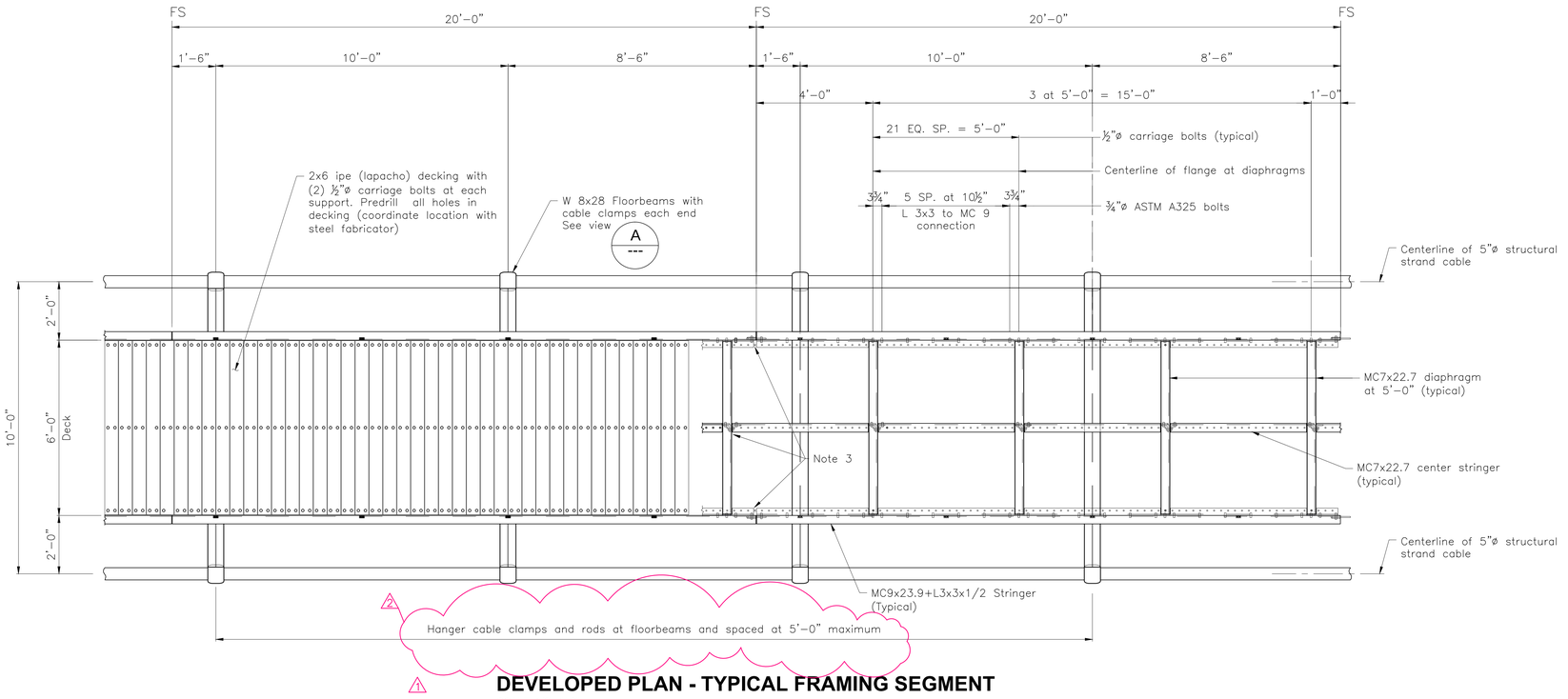

DEVELOPED PLAN - TYPICAL FRAMING SEGMENT

SCALE: 1/2"=1'-0"

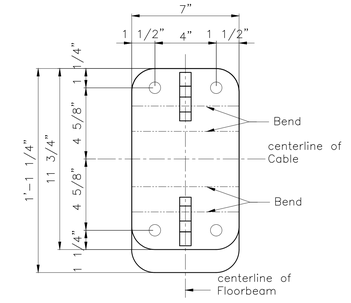

CABLE CLAMP DETAIL VIEW (A)

SCALE: 3"=1'-0"

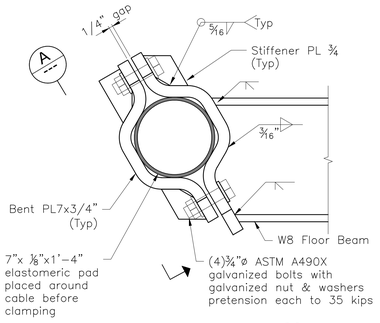

CABLE CLAMP SECTION (B)

SCALE: 3"=1'-0"

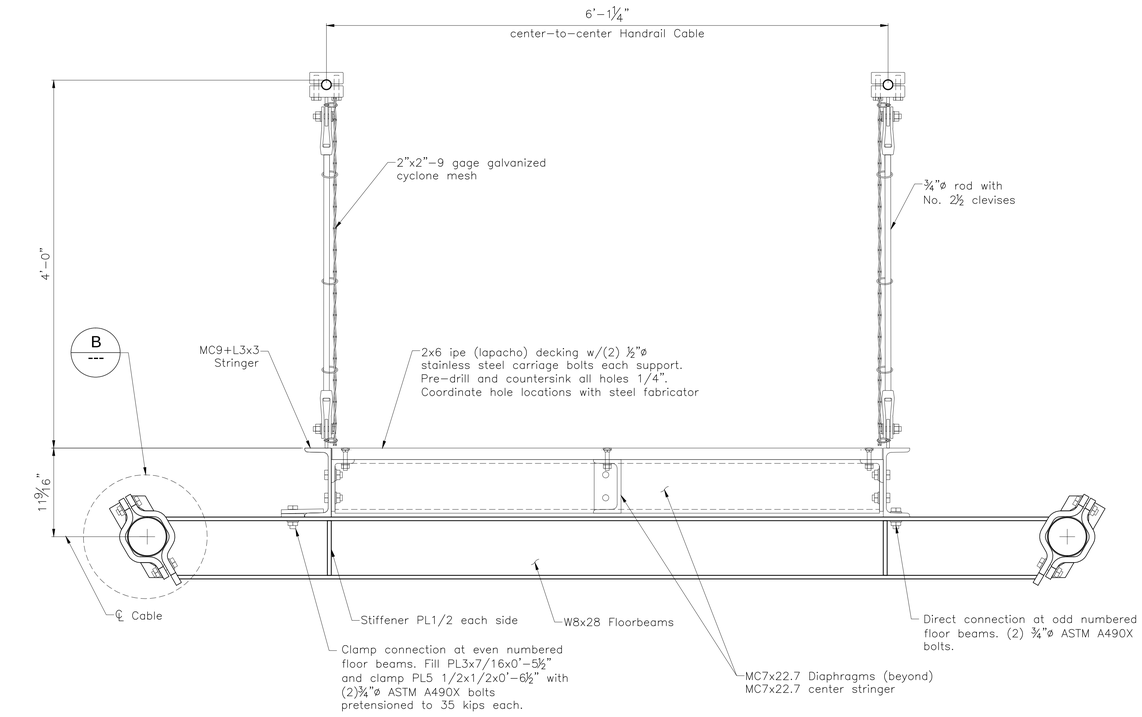

BRIDGE DECK TYPICAL SECTION (1/3)

SCALE: 1 1/2"=1'-0"

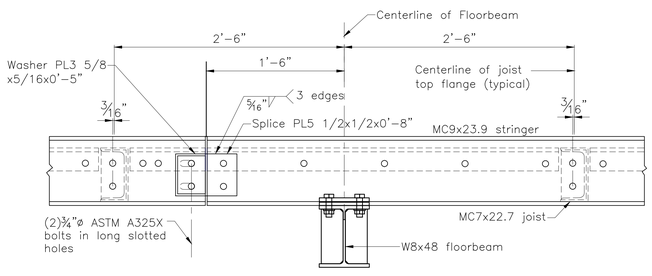

STRINGER SPLICE DETAIL

SCALE: 1 1/2"=1'-0"

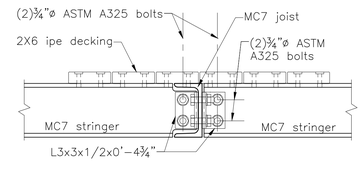

JOIST - INTERIOR STRINGER CONNECTION DETAIL

SCALE: 1 1/2"=1'-0"

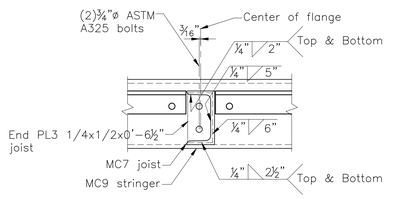

JOIST - STRINGER CONNECTION DETAIL

SCALE: 1 1/2"=1'-0"

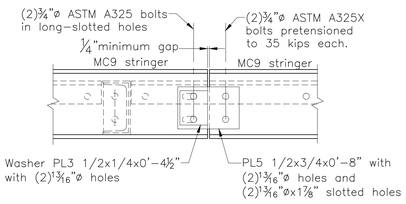

STRINGER - STRINGER EXPANSION DETAIL

SCALE: 3"=1'-0"

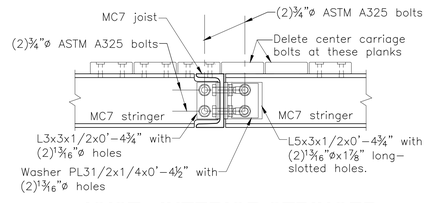

JOIST - INTERIOR STRINGER EXPANSION DETAIL

SCALE: 1 1/2"=1'-0"

NOTES:

1. All dimensions measured along cable centerline.
2. Handrail cable not shown for clarity.
3. Omit carriage bolt these locations (typical).
4. Work this sheet with BR-S713 and BR-S714.
5. See BR-716 for Handrail details.

Seals

STATE OF KENTUCKY · KWONG MAN CHENG · 23567 · LICENSED PROFESSIONAL ENGINEER

May 31, 2013

OPAC Consulting Engineers
315 Bay Street, Second Floor
San Francisco, CA 94945
(415)989-4551
www.opacengineers.com

LANDSCAPE ARCHITECT
Wallace Roberts & Todd, LLC
1700 Market Street
28th Floor
Philadelphia, PA 19103
tel 215.732.5215
fax 215.732.2351

Architect
BRAVURA
111 West Washington Street
Louisville, Kentucky 40202
T. (502) 584-9000
F. (502) 584-6829

The Parklands of Floyds Fork, Project 4A
The Strand, Turkey Run Park and Broad Run
Louisville, Kentucky

Owner:
21st Century Parks, Inc.
371 W. Main St., Suite 202
Louisville, Kentucky 40202

REV. #	DATE	DESCRIPTION
	05/06/2013	ISSUED FOR BID
1	05/23/2013	ADDENDUM #1: CORRECTIONS AND REVISED HANDRAIL
2	05/30/2013	ADDENDUM #2: ARCHITECTURAL REVISIONS

Job No:	12300.4AC
Date:	May 30, 2013
Scale:	As Noted
Drawn By:	L.Chien

ISSUED FOR ADDENDUM #2

Drawing Title:

Floyds Fork

ADD-ALT. NO. 1
PROJECT 4A
Typical Framing Segment and Details

Drawing No:

BR-S715

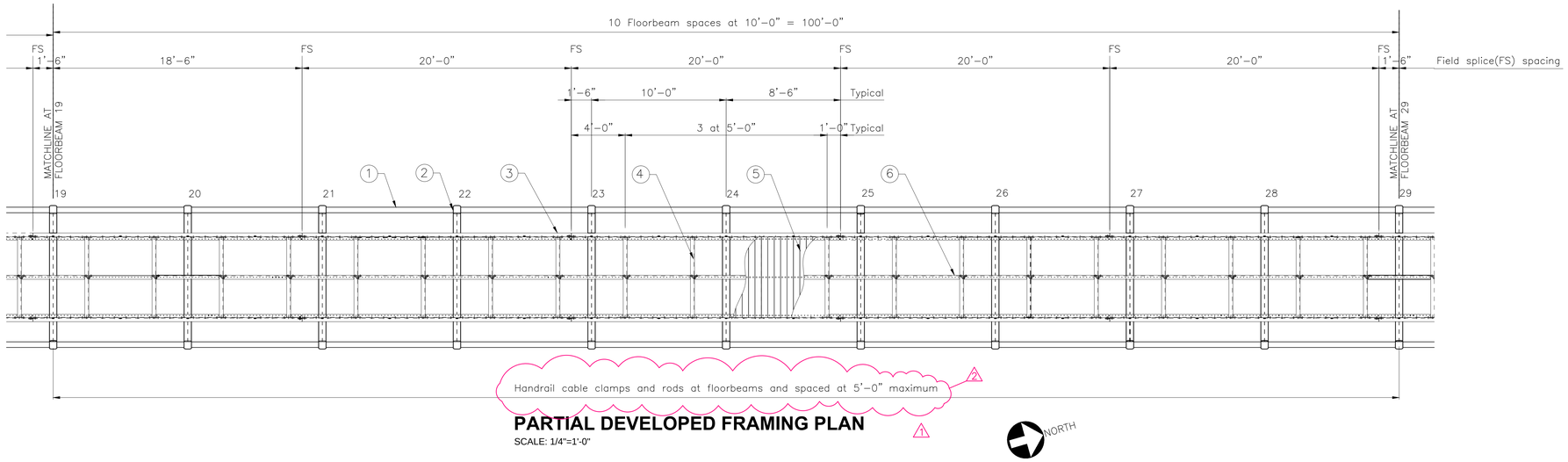

PARTIAL DEVELOPED FRAMING PLAN

SCALE: 1/4"=1'-0"

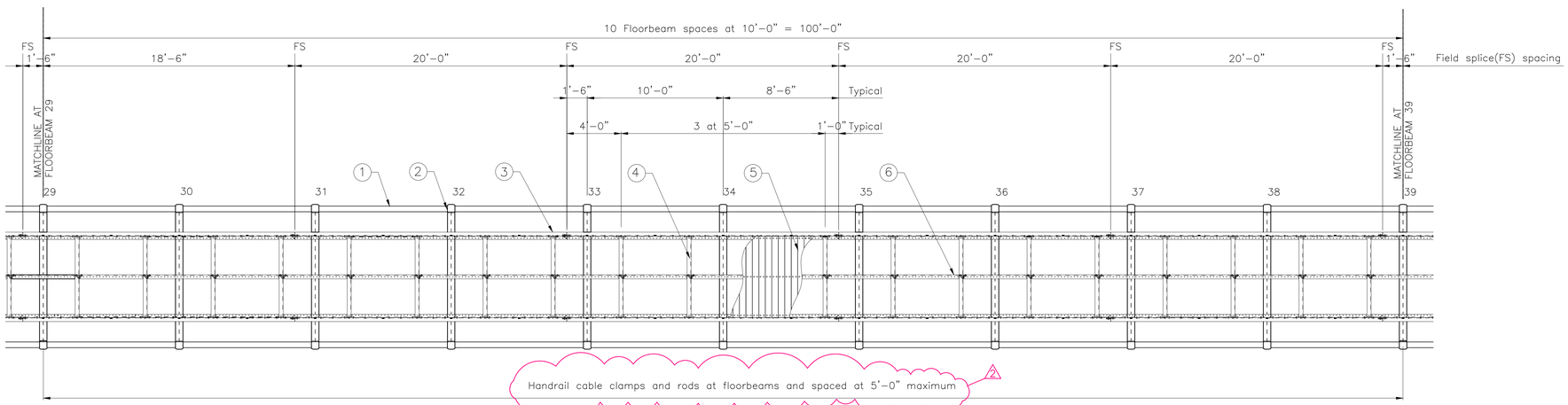

PARTIAL DEVELOPED FRAMING PLAN

SCALE: 1/4"=1'-0"

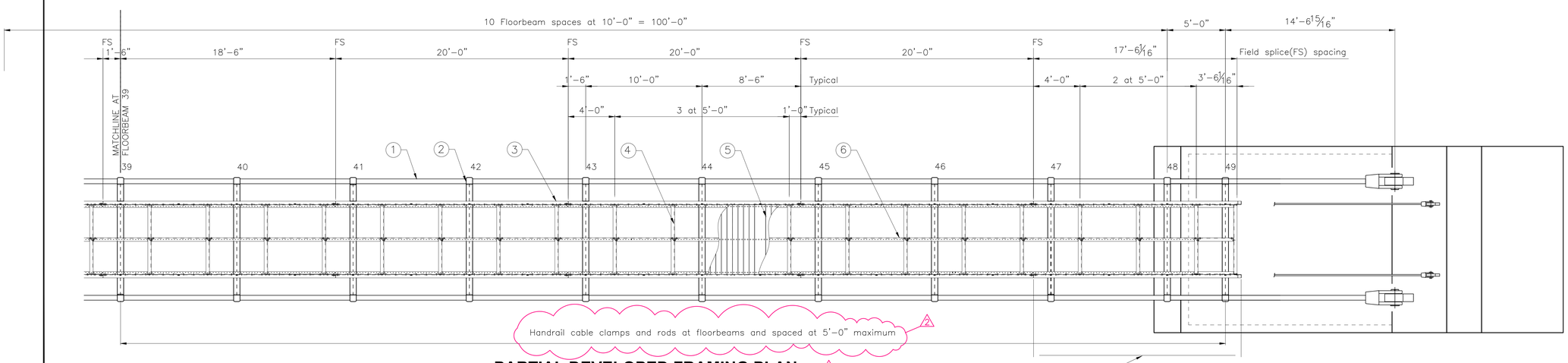

PARTIAL DEVELOPED FRAMING PLAN

SCALE: 1/4"=1'-0"

Erect floorbeam, stringers and diaphragms adjacent to armatures and landings after all other structural steel has been erected. Verify dimensions in field based on measurements taken at dawn before making the end cuts or drilling bolt holes for members adjacent to the landing.

NOTES:

1. 5"Ø structural strand cable.
2. W8x28 floorbeam with cable clamps.
3. MC9x23.7+L3x3x1/2 stringer.
4. MC7x22.7 diaphragms.
5. 2x6 ipe (Lapacho) decking.
6. MC7x22.7 center stringer.
7. All dimensions measured along centerline of cable.
8. Diaphragm dimensions are measured to center of flange.

Seals

STATE OF KENTUCKY
KWONG MAN CHING
29001
LICENSED PROFESSIONAL ENGINEER
May 30, 2013

OPAC Consulting Engineers
315 Bay Street, Second Floor
San Francisco, CA 94945
(415)989-4551
www.opacengineers.com

LANDSCAPE ARCHITECT
Wallace Roberts & Todd, LLC
1700 Market Street
28th Floor
Philadelphia, PA 19103
tel 215.732.5215
fax 215.732.2351

Architect
BRAVURA
111 West Washington Street
Louisville, Kentucky 40202
T: (502) 584.6000
F: (502) 584.6829

The Parklands of Floyds Fork, Project 4A
The Strand, Turkey Run Park and Broad Run
Louisville, Kentucky

Owner:
21st Century Parks, Inc.
371 W. Main St., Suite 202
Louisville, Kentucky 40202

REV #	DATE	DESCRIPTION
	05/08/2013	ISSUED FOR BID
1	05/23/2013	ADDENDUM #1: CORRECTIONS AND REVISED HANDRAIL
2	05/30/2013	ADDENDUM #2: ARCHITECTURAL REVISIONS

Job No:	12300.4AC
Date:	May 30, 2013
Scale:	As Noted
Drawn By:	L.Chien

ISSUED FOR ADDENDUM #2

Drawing Title:

Parklands of Floyds Fork

ADD-ALT. NO.1
PROJECT 4A
Developed Framing Plan - 2

Drawing No:

BR-S714

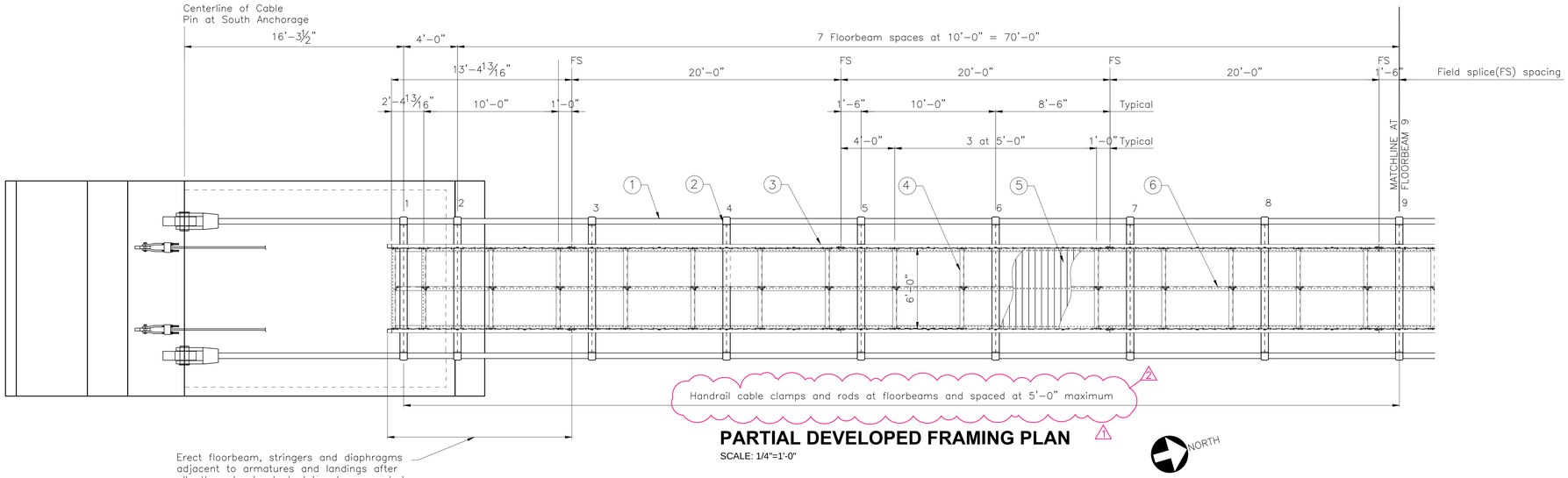

PARTIAL DEVELOPED FRAMING PLAN

SCALE: 1/4"=1'-0"

Erect floorbeam, stringers and diaphragms adjacent to armatures and landings after all other structural steel has been erected. Verify dimensions in field based on measurements taken at dawn before making the end cuts or drilling bolt holes for members adjacent to the landing.

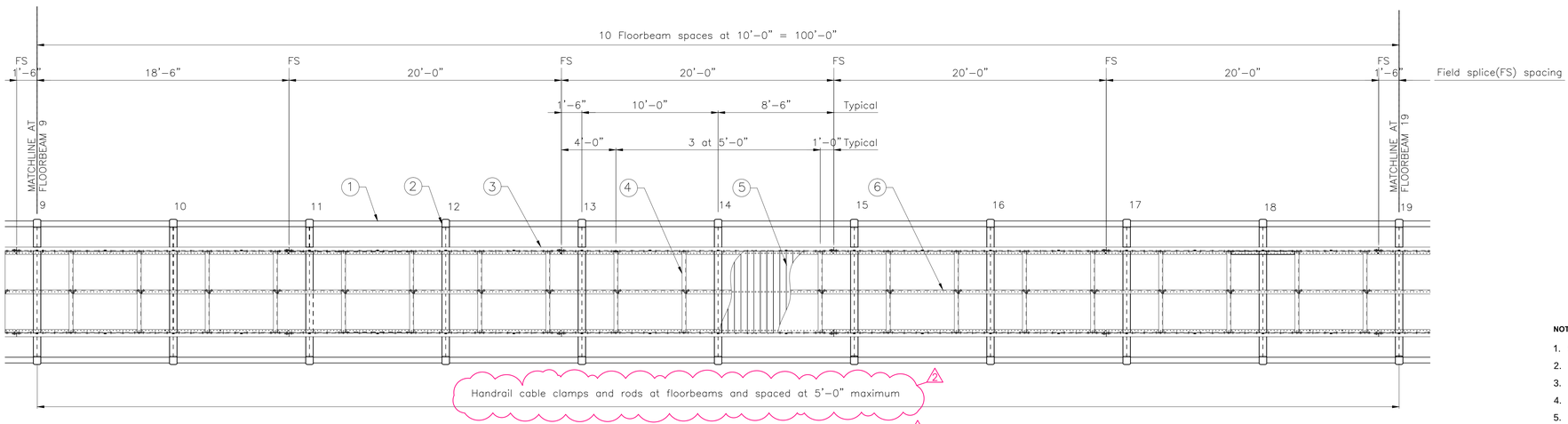

PARTIAL DEVELOPED FRAMING PLAN

SCALE: 1/4"=1'-0"

NOTES:

1. 5"Ø structural strand cable.
2. W8x28 floorbeam with cable clamps.
3. MC9x23.7+L3x3x1/2 stringer.
4. MC7x22.7 diaphragms.
5. 2x6 ipe (lapacho) decking.
6. MC7x22.7 center stringer.
7. All dimensions measured along centerline of cable.
8. Diaphragm dimensions are measured to center of flange.
9. Floorbeam spacing is given along the centerline of the cables.
10. Work this sheet with BR-S714.
11. See BR-S715 for framing details.

Seals

KWONG MAN CHEUNG 26901 LICENSED PROFESSIONAL ENGINEER STATE OF KENTUCKY

May 30, 2013

OPAC Consulting Engineers
315 Bay Street, Second Floor
San Francisco, CA 94945
(415)989-4551
www.opacengineers.com

LANDSCAPE ARCHITECT
Wallace Roberts & Todd, LLC
1700 Market Street
28th Floor
Philadelphia, PA 19103
tel 215.732.5215
fax 215.732.2351

Architect
BRAVURA
111 West Washington Street
Louisville, Kentucky 40202
T. (502) 584-9000
F. (502) 584-6829

The Parklands of Floyds Fork, Project 4A
The Strand, Turkey Run Park and Broad Run
Louisville, Kentucky

Owner:
21st Century Parks, Inc.
371 W. Main St. Suite 202
Louisville, Kentucky 40202

REV #	DATE	DESCRIPTION
	05/08/2013	ISSUED FOR BID
1	05/23/2013	ADDENDUM #1: CORRECTIONS AND REVISED HANDRAIL
2	05/30/2013	ADDENDUM #2: ARCHITECTURAL REVISIONS

Job No:	12300.4AC
Date:	May 30, 2013
Scale:	As Noted
Drawn By:	L.Chien

ISSUED FOR ADDENDUM #2

Drawing Title:

Parklands of Floyds Fork

ADD-ALT. NO.1
PROJECT 4A
Developed Framing Plan - 1

Drawing No:

BR-S713

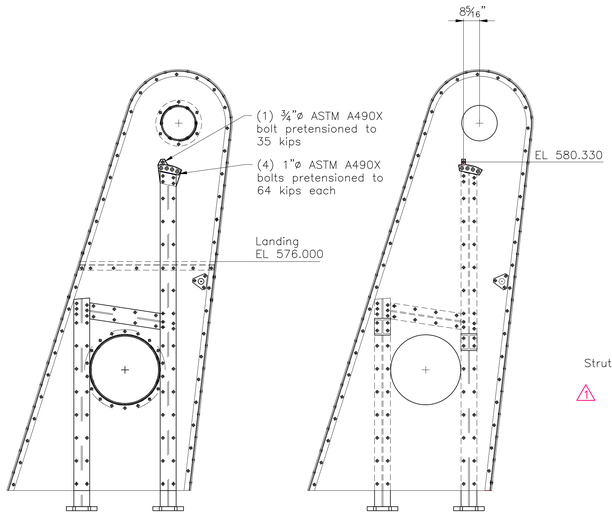

HANDRAIL OUTER PLATE
SCALE: 3/8"=1'-0"

HANDRAIL INNER PLATE
SCALE: 3/8"=1'-0"

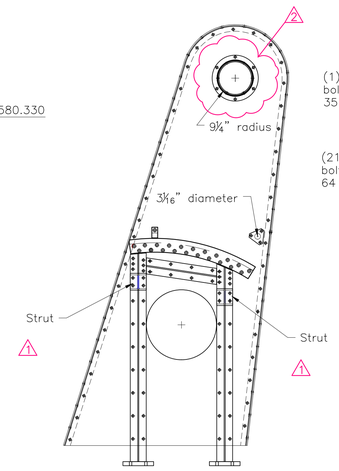

MAIN CABLE INNER PLATE
SCALE: 3/8"=1'-0"

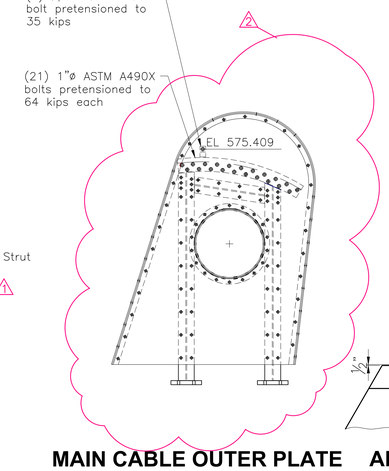

MAIN CABLE OUTER PLATE
SCALE: 3/8"=1'-0"

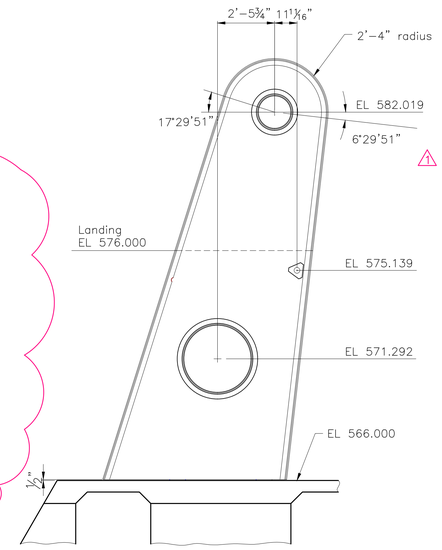

ARMATURE GEOMETRY
SCALE: 3/8"=1'-0"

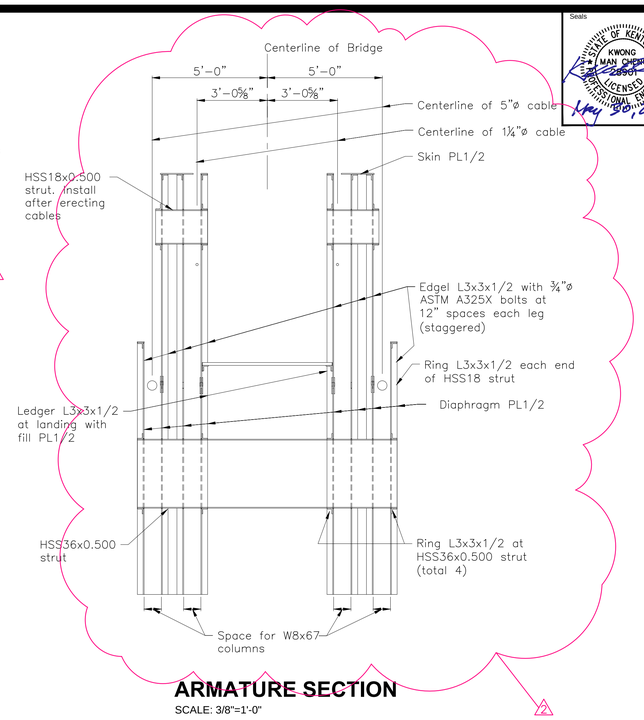

ARMATURE SECTION
SCALE: 3/8"=1'-0"

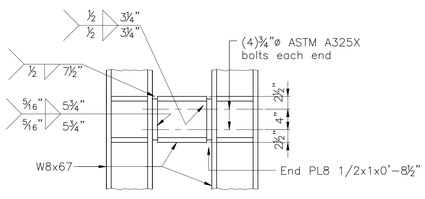

STRUT DETAIL
SCALE: 1"=1'-0"
1

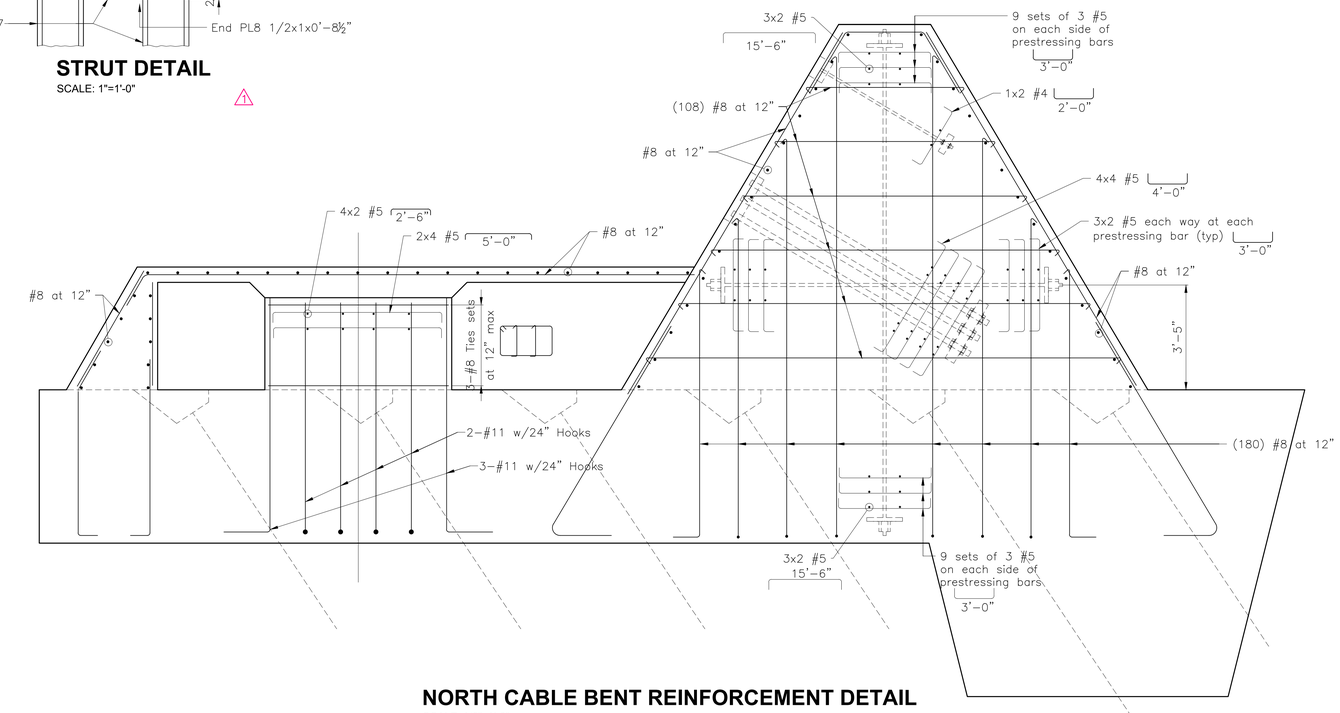

NORTH CABLE BENT REINFORCEMENT DETAIL
SCALE: 1/2"=1'-0"

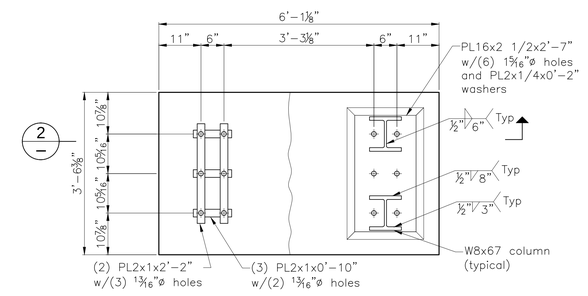

BENT COLUMN BASE DETAIL
1

SCALE: 3/4"=1/-0"

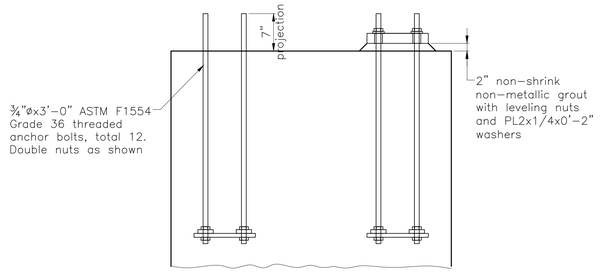

BENT COLUMN BASE SECTION
2

SCALE: 3/4"=1/-0"

NOTES:

1. See BR-S704 for WPs geometry data.
2. See BR-706 for North Anchorage details.
3. Work this sheet with BR-S712.

See BR-S719 and BR-S720 for Armature details.

Seals

STATE OF KENTUCKY
KWONG MAN CHEUNG
23901
LICENSED PROFESSIONAL ENGINEER
May 30, 2013

OPAC Consulting Engineers
315 Bay Street, Second Floor
San Francisco, CA 94945
(415)989-4551
www.opaceengineers.com

LANDSCAPE ARCHITECT
WRT
Wallace Roberts & Todd, LLC
1700 Market Street
28th Floor
Philadelphia, PA 19103
tel 215.732.5215
fax 215.732.2351

Architect
BRAVURA
111 West Washington Street
Louisville, Kentucky 40202
T. (502) 584-9000
F. (502) 584-0829

The Parklands of Floyds Fork, Project 4A
The Strand, Turkey Run Park and Broad Run
Louisville, Kentucky

Owner:
21st Century Parks, Inc.
371 W. Main St. Suite 202
Louisville, Kentucky 40202

REV #	DATE	DESCRIPTION
	05/08/2013	ISSUED FOR BID
1	05/23/2013	ADDENDUM #1: CORRECTIONS AND REVISED HANDRAIL
2	05/30/2013	ADDENDUM #2: ARCHITECTURAL REVISIONS

Job No:	12300.4AC
Date:	May 30, 2013
Scale:	As Noted
Drawn By:	L.Chien

ISSUED FOR ADDENDUM #2

Drawing Title:
Parklands of Floyds Fork
ADD-ALT. NO.1
PROJECT 4A
North Cable Bent
-- 1

Drawing No:
BR-S711

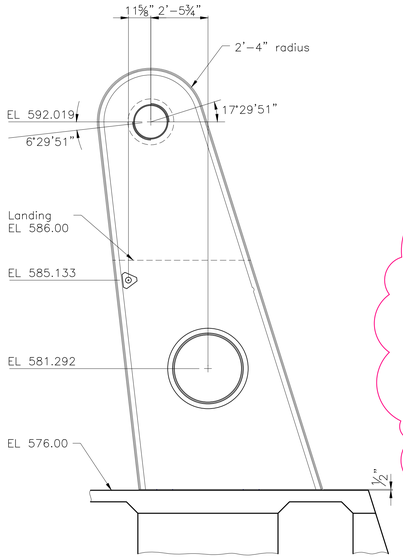

ARMATURE GEOMETRY
SCALE: 3/8"=1'-0"

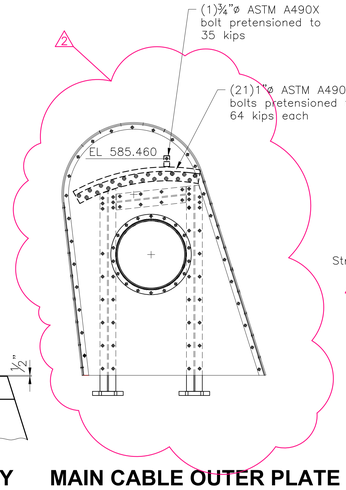

MAIN CABLE OUTER PLATE
SCALE: 3/8"=1'-0"

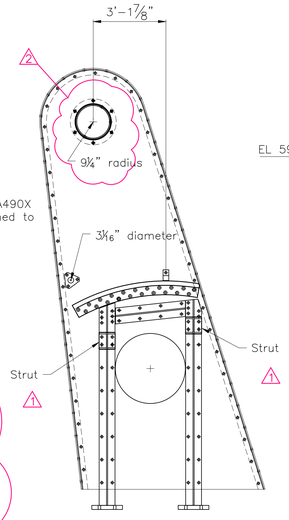

MAIN CABLE INNER PLATE
SCALE: 3/8"=1'-0"

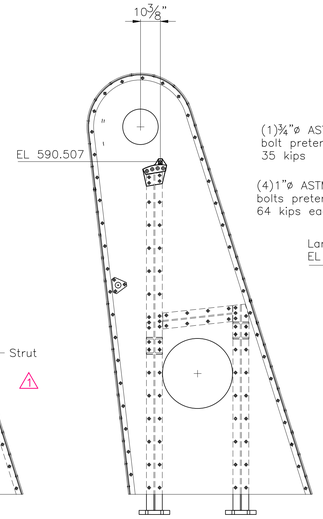

HANDRAIL INNER PLATE
SCALE: 3/8"=1'-0"

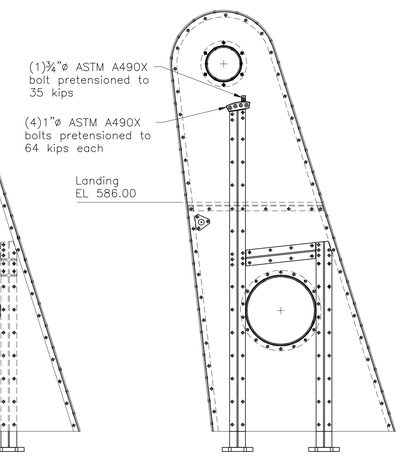

HANDRAIL OUTER PLATE
SCALE: 3/8"=1'-0"

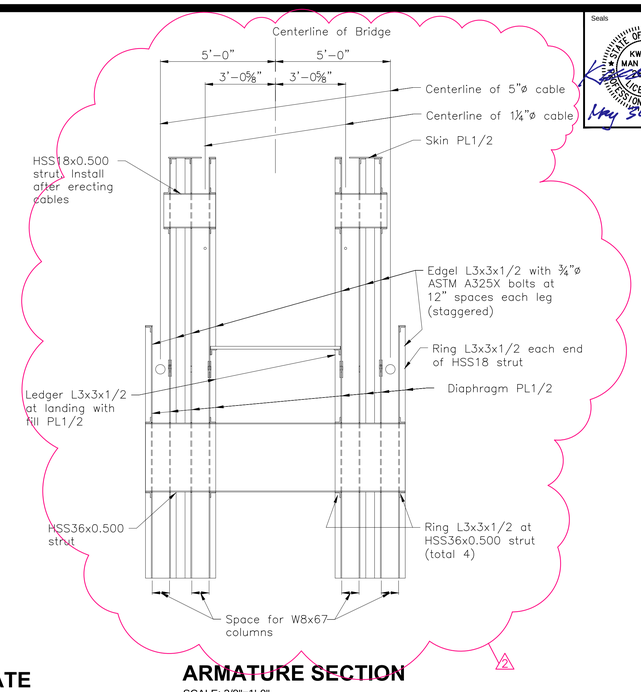

ARMATURE SECTION
SCALE: 3/8"=1'-0"

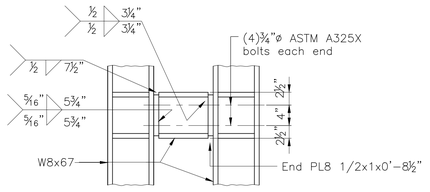

STRUT DETAIL
SCALE: 1"=1'-0"

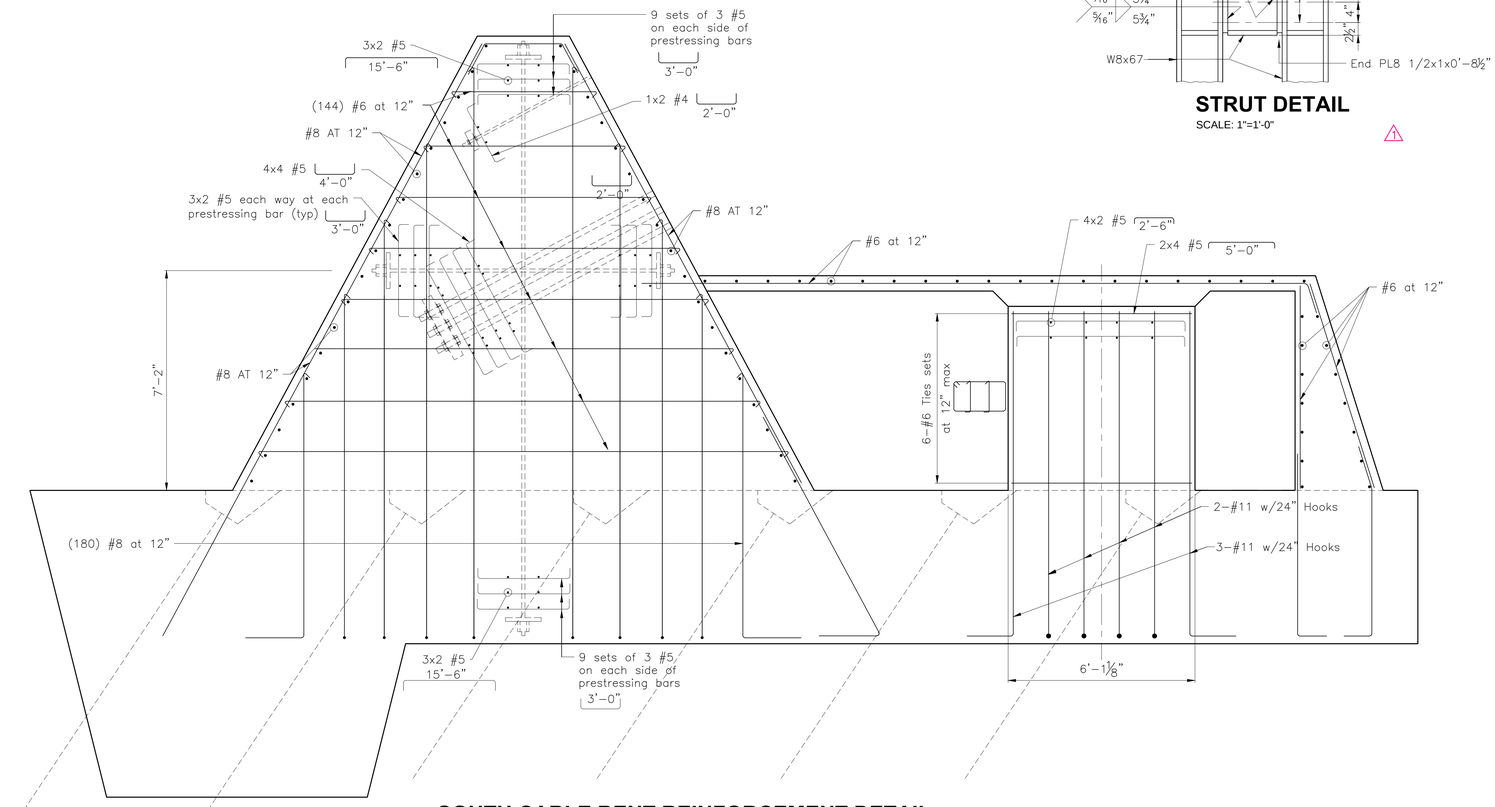

SOUTH CABLE BENT REINFORCEMENT DETAIL
SCALE: 1/2"=1'-0"

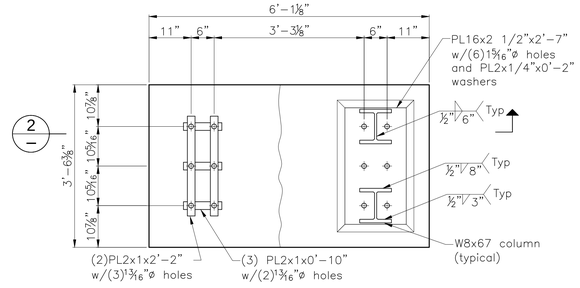

BENT COLUMN BASE DETAIL 1/—
SCALE: 3/4"=1/-0"

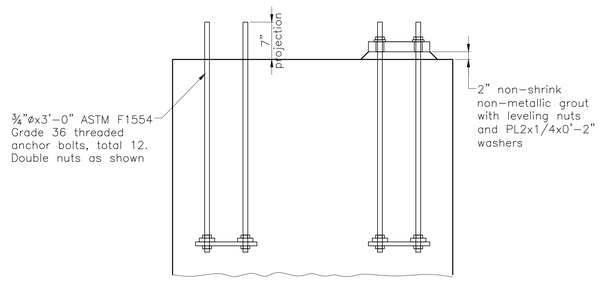

BENT COLUMN BASE SECTION 2/—
SCALE: 3/4"=1/-0"

NOTES:

1. See BR-S704 for WPs geometry data.
2. See BR-705 for South Anchorage details.
3. Work this sheet with BR-S710.

Seals

STATE OF KENTUCKY
KWONG MAN CHENG
20061
LICENSED PROFESSIONAL ENGINEER
May 30, 2013

OPAC Consulting Engineers
315 Bay Street, Second Floor
San Francisco, CA 94945
(415)989-4551
www.opacengineers.com

LANDSCAPE ARCHITECT
WRT
Wallace Roberts & Todd, LLC
1700 Market Street
28th Floor
Philadelphia, PA 19103
tel 215.732.5215
fax 215.732.2551

Architect
BRAVURA
111 West Washington Street
Louisville, Kentucky 40202
T: (502) 584-9900
F: (502) 584-0829

The Parklands of Floyds Fork, Project 4A
The Strand, Turkey Run Park and Broad Run
Louisville, Kentucky

Owner:
21st Century Parks, Inc.
371 W. Main St., Suite 202
Louisville, Kentucky 40202

REV #	DATE	DESCRIPTION
	05/06/2013	ISSUED FOR BID
1	05/23/2013	ADDENDUM #1 CORRECTIONS AND REVISED HANDRAIL
2	05/30/2013	ADDENDUM #2 ARCHITECTURAL REVISIONS

Job No:	12300.4AC
Date:	May 30, 2013
Scale:	As Noted
Drawn By:	L.Chien

ISSUED FOR ADDENDUM #2

Drawing Title:
Parklands of Floyds Fork
ADD-ALT. NO.1
PROJECT 4A
South Cable Bent - 1

Drawing No:
BR-S709

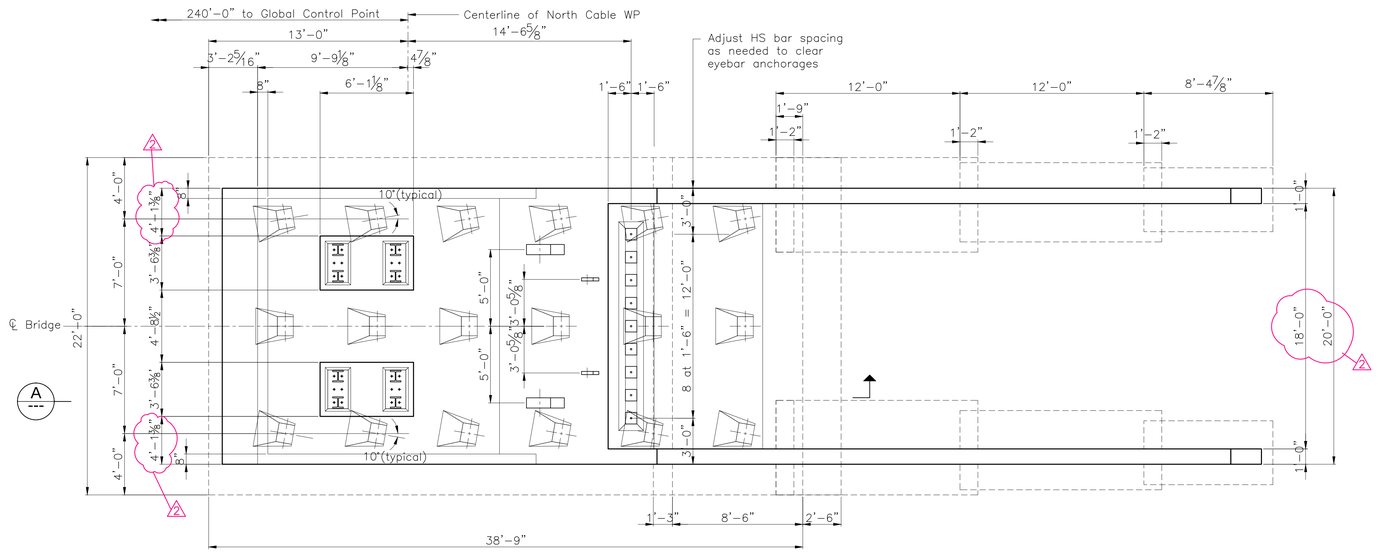

NORTH ANCHOR PAD PLAN

SCALE: 1/4"=1'-0"

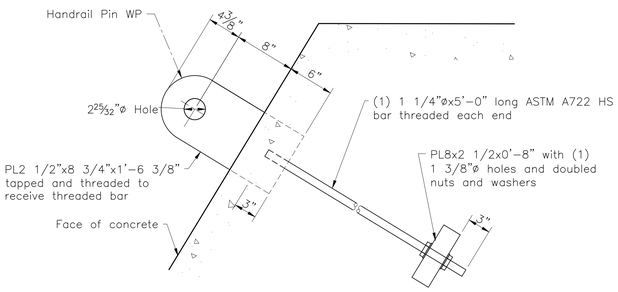

HANDRAIL EYEBAR ANCHORAGE

1

SCALE: 1 1/2"=1'-0"

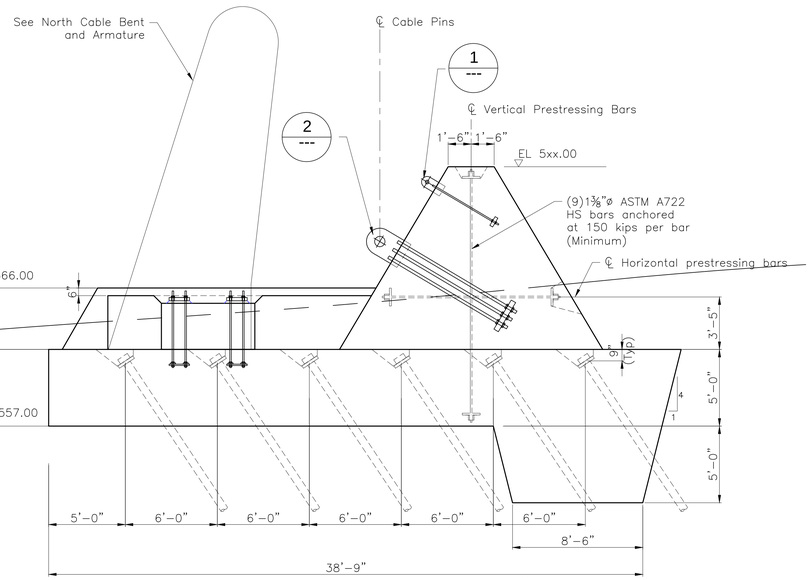

NORTH ANCHOR PAD SECTION

A

SCALE: 1/4"=1'-0"

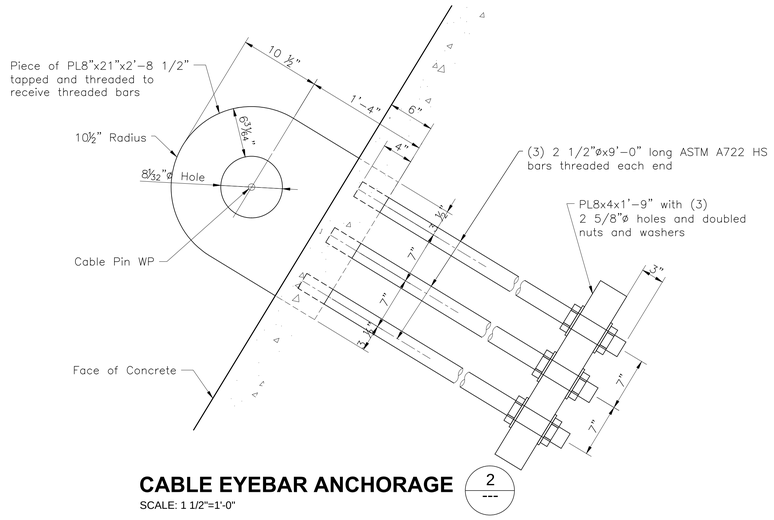

CABLE EYEBAR ANCHORAGE

2

SCALE: 1 1/2"=1'-0"

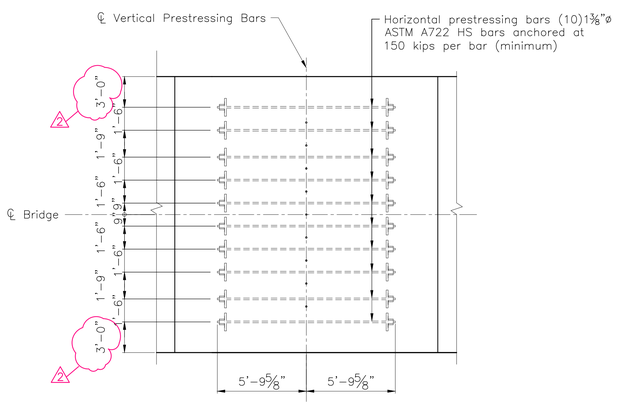

HORIZONTAL PRESTRESSING PLAN

SCALE: 1/4"=1'-0"

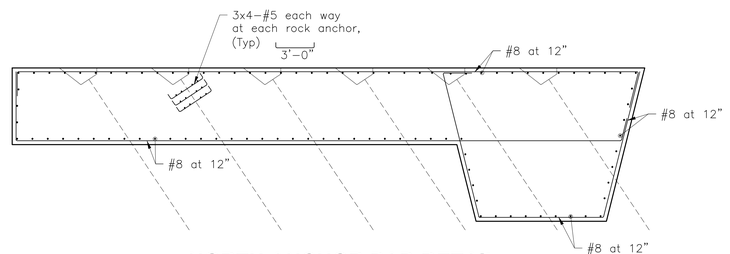

NORTH ANCHOR PAD DETAIL

SCALE: 1/4"=1'-0"

NOTES:

1. See BR-S703 and BR-S704 for GCP and WPs geometry data.
2. See BR-S711 and BR-S712 for Cable Bent details.
3. See BR-S719 and BR-S720 for Armature details.

See BR-S701 and BR-S708 for Rock Anchor general notes and details.

Seals

STATE OF KENTUCKY — KWONG MAN CHIEN — 28901 — LICENSED PROFESSIONAL ENGINEER — May 30, 2013

OPAC Consulting Engineers
315 Bay Street, Second Floor
San Francisco, CA 94945
(415)989-4551
www.opacengineers.com

LANDSCAPE ARCHITECT
Wallace Roberts & Todd, LLC
1700 Market Street
28th Floor
Philadelphia, PA 19103
tel 215.732.5215
fax 215.732.2551

Architect
BRAVURA
111 West Washington Street
Louisville, Kentucky 40202
T: (502) 584-6000
F: (502) 584-6829

The Parklands of Floyds Fork, Project 4A

The Strand, Turkey Run Park and Broad Run
Louisville, Kentucky

Owner:
21st Century Parks, Inc.
371 W. Main St., Suite 202
Louisville, Kentucky 40202

REV #	DATE	DESCRIPTION
	05/06/2013	ISSUED FOR BID
1	05/23/2013	ADDENDUM #1 CORRECTIONS AND REVISED HANDRAIL
2	05/30/2013	ADDENDUM #2 ARCHITECTURAL REVISIONS

Job No:	12300.4AC
Date:	May 30, 2013
Scale:	As Noted
Drawn By:	L.Chien

ISSUED FOR ADDENDUM #2

Drawing Title:

Parklands of Floyds Fork

ADD-ALT. NO.1 PROJECT 4A North Anchorage

Drawing No:

BR-S707

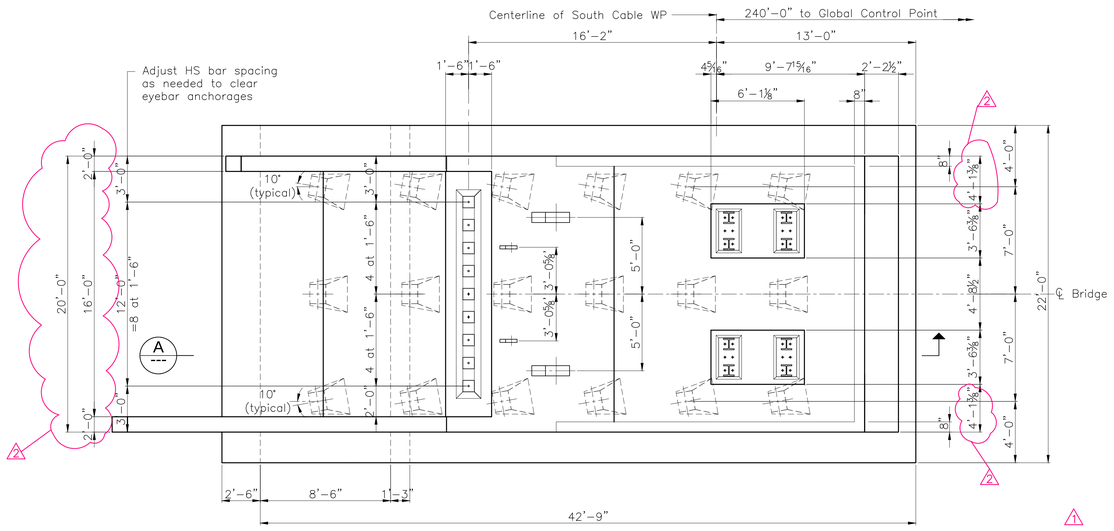

SOUTH ANCHOR PAD PLAN

SCALE: 1/4"=1'-0"

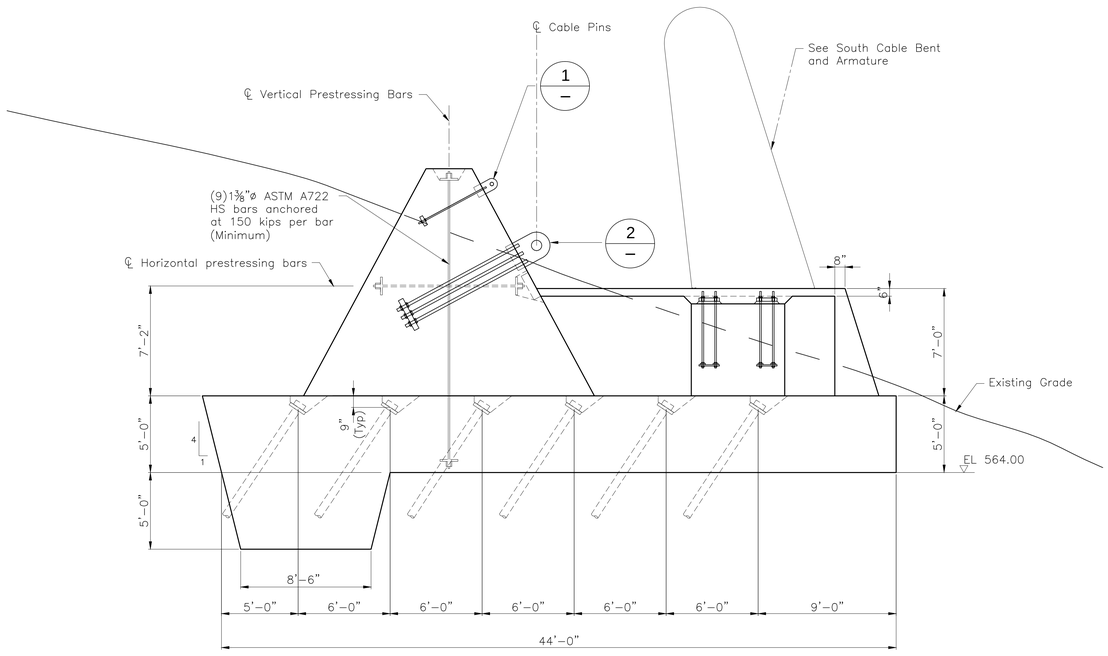

SOUTH ANCHOR PAD SECTION

A

SCALE: 1/4"=1'-0"

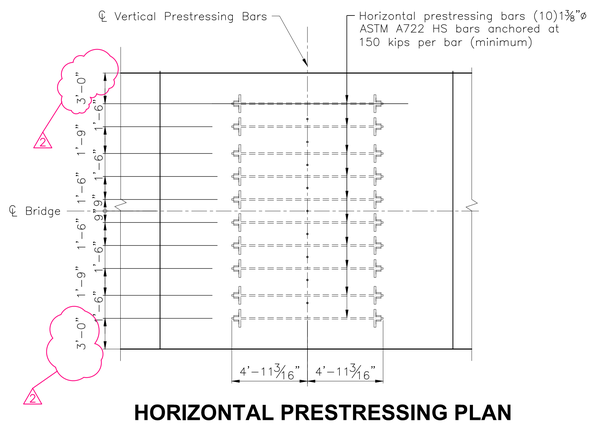

HORIZONTAL PRESTRESSING PLAN

SCALE: 1/4"=1'-0"

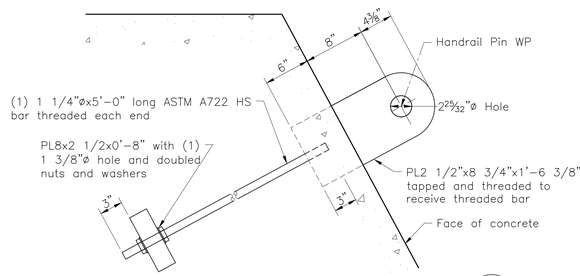

HANDRAIL EYEBAR ANCHORAGE

1

SCALE: 1 1/2"=1'-0"

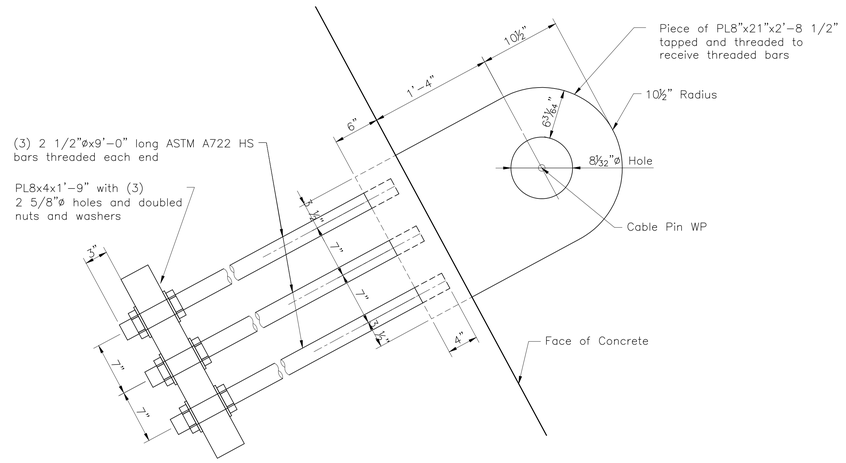

CABLE EYEBAR ANCHORAGE

2

SCALE: 1 1/2"=1'-0"

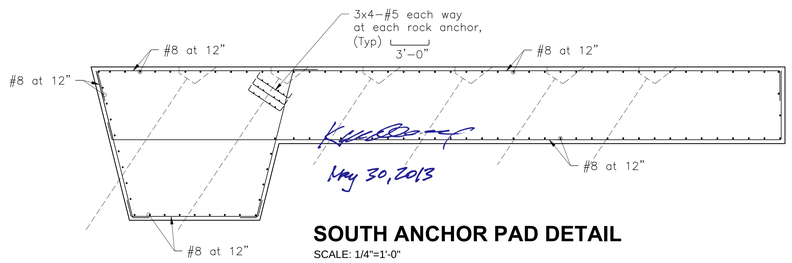

SOUTH ANCHOR PAD DETAIL

SCALE: 1/4"=1'-0"

NOTES:

1. See BR-S703 and BR-S704 for GCP and WPs geometry data.
2. See BR-S709 and BR-S710 for Cable Bent details.
3. See BR-S717 and BR-S718 for Armature details.
4. See BR-S701 and BR-S708 for Rock Anchor general notes and details.

Seals

STATE OF KENTUCKY
KWONG MAN CHENG
19661
LICENSED PROFESSIONAL ENGINEER
May 30, 2013

OPAC Consulting Engineers
315 Bay Street, Second Floor
San Francisco, CA 94945
(415)989-4551
www.opacengineers.com

LANDSCAPE ARCHITECT
Wallace Roberts & Todd, LLC
1700 Market Street
28th Floor
Philadelphia, PA 19103
tel 215.732.5215
fax 215.732.2551

Architect
BRAVURA
111 West Washington Street
Louisville, Kentucky 40202
T: (502) 584-6900
F: (502) 584-6929

The Parklands of Floyds Fork, Project 4A
The Strand, Turkey Run Park and Broad Run
Louisville, Kentucky

Owner:
21st Century Parks, Inc.
371 W. Main St., Suite 202
Louisville, Kentucky 40202

REV #	DATE	DESCRIPTION
	05/08/2013	ISSUED FOR BID
1	05/23/2013	ADDENDUM #1: CORRECTIONS AND REVISED HANDRAIL
2	05/30/2013	ADDENDUM #2: ARCHITECTURAL REVISIONS

Job No:	12300.4AC
Date:	May 30, 2013
Scale:	As Noted
Drawn By:	L.Chien

ISSUED FOR ADDENDUM #2

Drawing Title:

Parklands of Floyds Fork

ADD-ALT. NO.1 PROJECT 4A South Anchorage

Drawing No:

BR-S706

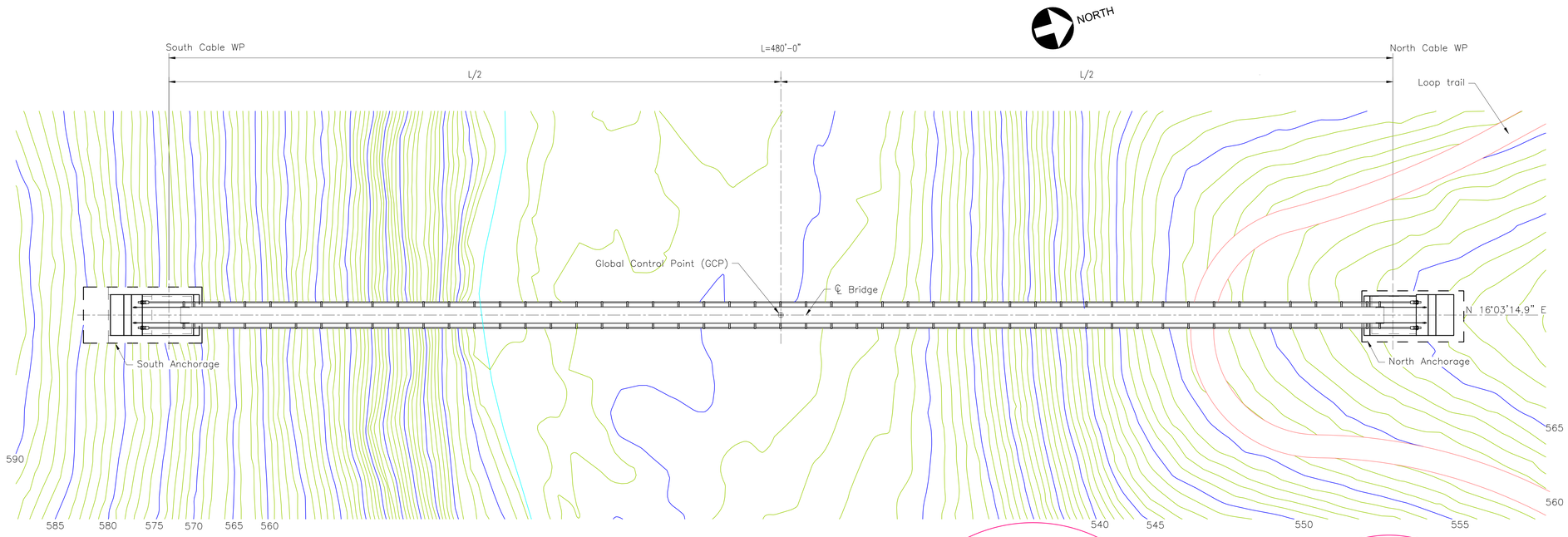

BRIDGE PLAN

scale: 1" = 20'

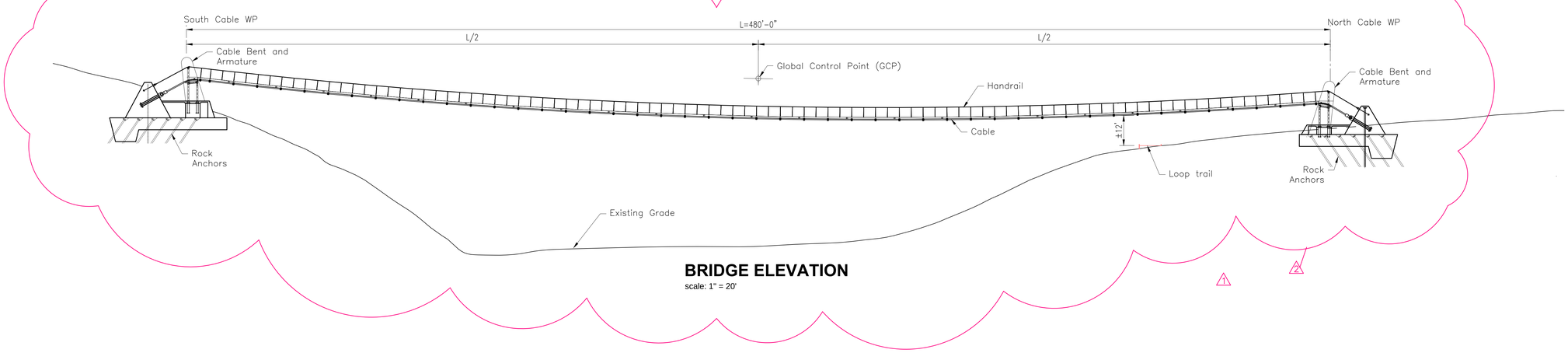

BRIDGE ELEVATION

scale: 1" = 20'

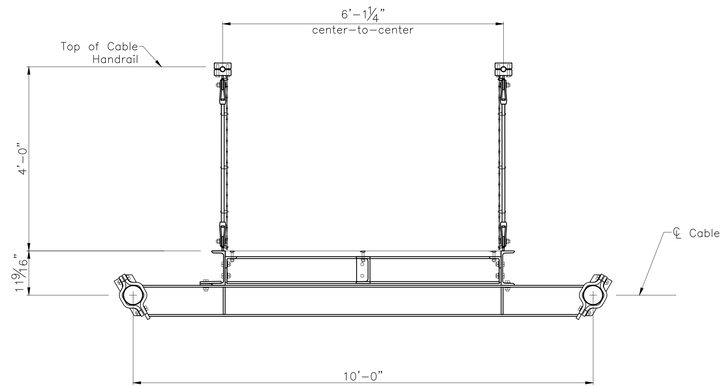

TYPICAL SECTION

SCALE: 3/4"=1'-0"

NOTES:

1. The cable WP locations were established from topographic map and data provided by others.
2. The Global Control Point (GCP) for the bridge is set at (N 1272095.2278, E 228234.0692, Elevation 580.00), which is located at the bridge center.
3. The orientation of the longitudinal axis of the bridge is N 16° 03' 14.9" E.
4. See BR-S704 for detailed layout of the bridge.
5. Contractor shall verify all controlling field dimensions before ordering or fabrication any materials.

Seals

STATE OF KENTUCKY
KWONG MAN CHENG
LICENSED PROFESSIONAL ENGINEER
May 30, 2013

OPAC Consulting Engineers
315 Bay Street, Second Floor
San Francisco, CA 94945
(415)989-4551
www.opacengineers.com

LANDSCAPE ARCHITECT
WRT
Wallace Roberts & Todd, LLC
1700 Market Street
28th Floor
Philadelphia, PA 19103
tel 215.732.5215
fax 215.732.2551

Architect
BRAVURA
111 West Washington Street
Louisville, Kentucky 40202
T: (502) 584-9900
F: (502) 584-0829

The Parklands of Floyds Fork, Project 4A
The Strand, Turkey Run Park and Broad Run
Louisville, Kentucky

Owner:
21st Century Parks, Inc.
371 W. Main St., Suite 202
Louisville, Kentucky 40202

REV #	DATE	DESCRIPTION
	05/08/2013	ISSUED FOR BID
1	05/23/2013	ADDENDUM #1: CORRECTIONS AND REVISED HANDRAIL
2	05/30/2013	ADDENDUM #2: ARCHITECTURAL REVISIONS

Job No:	12300.4AC
Date:	May 30, 2013
Scale:	As Noted
Drawn By:	L.Chien

ISSUED FOR ADDENDUM #2

Drawing Title:

Parklands of Floyds Fork

ADD-ALT. NO.1 PROJECT 4A Plan and Elevation

Drawing No:

BR-S703

Seals

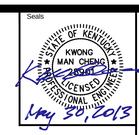

Index Of Drawings

BR-S701	Title Sheet and Index
BR-S702	General Notes
BR-S703	Plan and Elevation
BR-S704	Cable Workpoint Layout
BR-S705	Foundation Layout
BR-S706	South Anchorage
BR-S707	North Anchorage
BR-S708	Rock Anchor Details
BR-S709	South Cable Bent - 1
BR-S710	South Cable Bent - 2
BR-S711	North Cable Bent - 1
BR-S712	North Cable Bent - 2
BR-S713	Developed Framing Plan - 1
BR-S714	Developed Framing Plan - 2
BR-S715	Typical Framing Segment and Details
BR-S716	Handrail Cable and Details
BR-S717	South Walls and Gangplank - 1
BR-S718	South Walls and Gangplank - 2
BR-S719	North Walls and Gangplank - 1
BR-S720	North Walls and Gangplank - 2
BR-S721	Gate and Details

OPAC Consulting Engineers
315 Bay Street, Second Floor
San Francisco, CA 94945
(415)989-4551
www.opacengineers.com

LANDSCAPE ARCHITECT
WRT
Wallace Roberts & Todd, LLC
1700 Market Street
28th Floor
Philadelphia, PA 19103
tel 215.732.5215
fax 215.732.2331

Architect
BRAVURA
111 West Washington Street
Louisville, Kentucky 40202
T. (502) 584.6000
F. (502) 584.6829

The Parklands of Floyds Fork, Project 4A
The Strand, Turkey Run Park and Broad Run
Louisville, Kentucky

Owner:
21st Century Parks, Inc.
371 W. Main St., Suite 202
Louisville, Kentucky 40202

REV #	DATE	DESCRIPTION
	05/08/2013	ISSUED FOR BID
1	05/23/2013	ADDENDUM #1: CORRECTIONS AND REVISED HANDRAIL
2	05/30/2013	ADDENDUM #2: ARCHITECTURAL REVISIONS

Job No: 12300.4AC
Date: May 30, 2013
Scale: As Noted
Drawn By: L.Chien

ISSUED FOR ADDENDUM #2

Drawing Title:

Parklands of Floyds Fork

ADD-ALT. NO.1
PROJECT 4A
Title Sheet and index

Drawing No:

BR-S701

GENERAL NOTES

1. REFER TO CIVIL DRAWINGS FOR TRAIL, ROAD AND LOOP ALIGNMENTS BEYOND WHAT IS SHOWN.

2. UNLESS OTHERWISE NOTED ON THESE DRAWINGS, REFER TO CIVIL DRAWINGS FOR SPOT ELEVATIONS & SITE GRADING.

3. SEAT WALLS AND ROCK FENCE DIMENSIONS ARE TAKEN AT THE CENTERLINE OF THE WALL ARC.

4. PROTECTION OF TREES IS CRITICALLY IMPORTANT WITHIN ALL AREAS OF THE WORK. PRIOR TO ANY CLEARING, THE "LIMITS OF DISTURBANCE" FOR CONSTRUCTION OF ALL BUILDINGS, ARCHITECTURAL FEATURES, PLAZAS, AND UNDERGROUND UTILITIES SHALL BE STAKED BY THE CONTRACTOR, AND THE STAKED ALIGNMENTS SHALL BE REVIEWED BY THE OWNER'S DESIGNATED TREE PROTECTION REPRESENTATIVE. NO CLEARING OR CONSTRUCTION ACTIVITY SHALL OCCUR UNTIL THE AREAS TO BE DISTURBED ARE STAKED, REVIEWED AND APPROVED BY THE OWNER'S REPRESENTATIVE. CLEARING SHALL BE MINIMIZED AND STRICTLY LIMITED TO THE STAKED AND APPROVED AREAS OF DISTURBANCE. DURING CONSTRUCTION, THE CONTRACTOR SHALL AVOID USING ANY UNCLEARED WOODED AREAS OUTSIDE OF THE APPROVED AREAS OF DISTURBANCE FOR ACCESS, MATERIAL STORAGE OR PARKING.

KEY NOTES

- A — SEAT WALL, SEE DETAILS 2&3/A7-301
- B — PLANTATION ERA ROCK FENCE, SEE DETAILS 1&8/A7-301
- C — CONTROL JOINT, SEE DETAIL 7/A7-301
- D — EXPANSION JOINT, SEE DETAIL 6/A7-301
- E — LOUISVILLE LOOP, SEE CIVIL DRAWINGS FOR LAYOUT AND DETAILS
- F — ADA DETECTABLE WARNING PAVERS, SEE DETAILS 4&5/A7-301
- G — EXCURSION TRAIL – SEE CIVIL DRAWINGS FOR LAYOUT AND DETAILS
- H — C.I.P. CONCRETE PEDESTRIAN WALK, SEE DETAIL 9/A7-301
- I — BOLLARDS/FENCES/GATES, SEE DRAWING SUBSET A8-100 FOR DETAILS & LAYOUT
- J — CULVERT, SEE CIVIL DRAWINGS FOR LAYOUT AND DETAILS
- K — BRIDGE, SEE CIVIL DRAWINGS FOR LAYOUT AND DETAILS
- L — ROAD STRIPPING, SEE CIVIL DRAWINGS AND SPECIFICATIONS FOR DETAILS
- M — PARKING LOT, SEE CIVIL DRAWINGS FOR LAYOUT AND DETAILS
- N — TRAILHEAD SIGNAGE, SEE DETAILS 11,12,13/A7-301
- O — LATERAL FIELD, SEE CIVIL DRAWINGS FOR LAYOUT AND DETAILS
- P — 4 RAIL FENCE & GATE, SEE SUBSET A8-100 FOR DETAILS & LAYOUT
- Q — RETAINING WALL, SEE CIVIL DRAWINGS FOR LAYOUT AND DETAILS
- R — UTILITY LINES, SEE CIVIL DRAWINGS FOR LAYOUT NO DETAILS
- S — LIMESTONE BENCH – SEE DETAIL 10/A7-301
- T — BIKE RACK, N.I.C.
- U — TRASH CAN, N.I.C.
- V — BENCH, N.I.C.
- W — PICNIC TABLE, N.I.C.
- X — LIGHT BOLLARD, SEE ELECTRICAL DRAWINGS FOR FIXTURE TYPE AND DETAILS



KEY PLAN

SCALE: 1"=200'-0"

Cliffside Center — J / A7-108

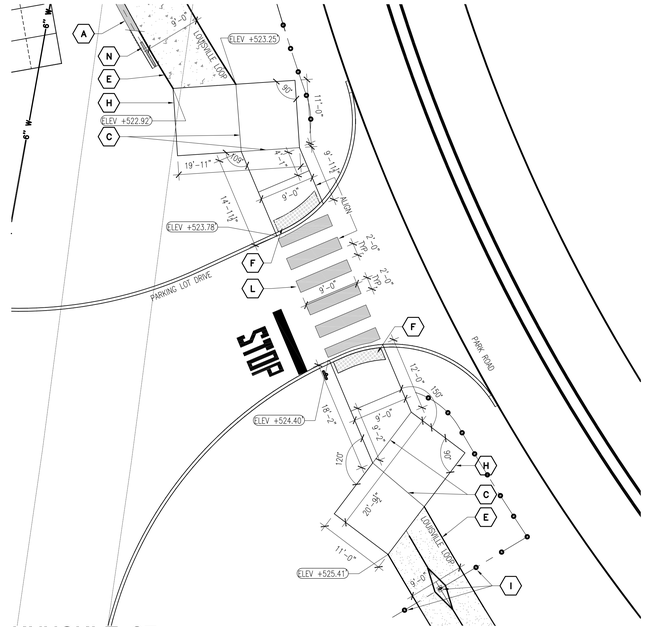

KNUCKLE 37

SCALE: 1"=10'-0"

37 / A7-108

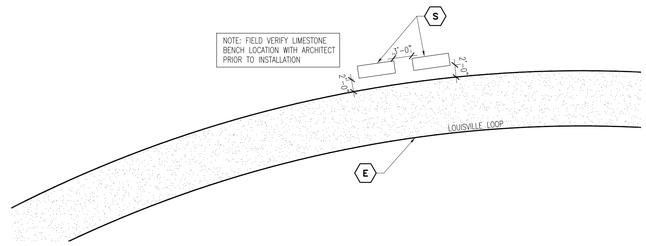

KNUCKLE 38

SCALE: 1"=10'-0"

38 / A7-108

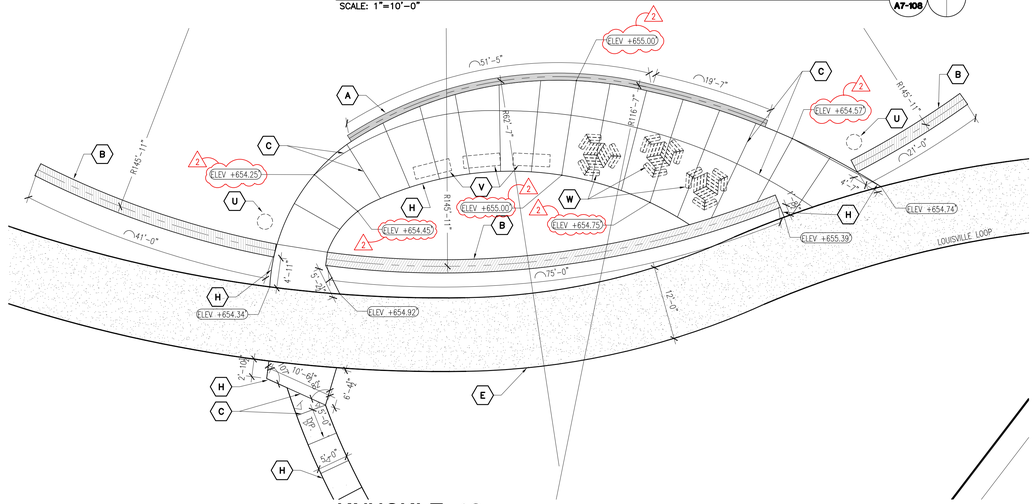

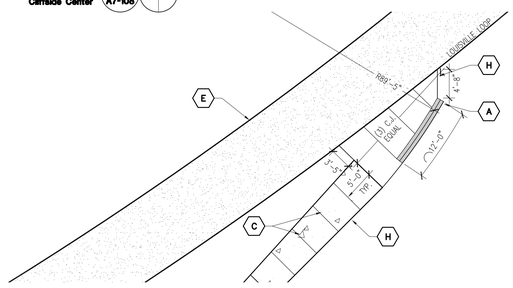

KNUCKLE 39

SCALE: 1"=10'-0"

39 / A7-108

KNUCKLE 40

SCALE: 1"=10'-0"

40 / A7-108

Architecture
Engineering
Planning

815 West Market Street, Suite 200, Louisville, Kentucky 40202
Phone: (502) 584-6858 Fax: (502) 584-6858 www.ogle.com
Kentucky · Indiana · Georgia · West Virginia · Tennessee · Florida

LANDSCAPE ARCHITECT
Wallace Roberts & Todd, LLC
1700 Market Street
28th Floor
Philadelphia, PA 19103
tel 215.732.5215
fax 215.732.2551

Architect
BRAVURA
111 West Washington Street
Louisville, Kentucky 40202
T: (502) 584-9900
F: (502) 584-0629

REV #	DATE	DESCRIPTION
	05/08/2013	ISSUED FOR BID
1	05/30/2013	ADDENDUM #2: ADDED SPOT ELEVATIONS TO KNUCKLE #3

Job No:	155-617
Date:	May 30, 2013
Scale:	AS SHOWN
Drawn By:	

ISSUED FOR ADDENDUM #2

The Parklands of Floyds Fork, Project 4A

The Strand, Turkey Run Park and Broad Run Park
Louisville, Kentucky

Owner:
21st Century Parks, Inc.
371 W. Main St., Suite 202
Louisville, Kentucky 40202

Drawing Title:

Parklands of Floyds Fork

PROJECT 4A

Knuckles Enlarged Plans

Drawing No:

A7-108

May 29, 2013 – 3:59pm
Z:\Drawings\KY155-Floyds Fork\KY155-617 Project 4\Knuckles\Project 4 – Subset 7 – Knuckle Plans.dwg (A7-108)

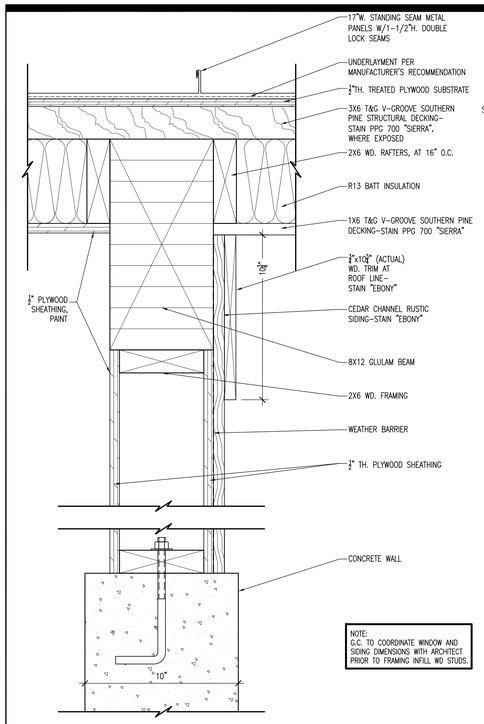

NOTE:
G.C. TO COORDINATE WINDOW AND SIDING DIMENSIONS WITH ARCHITECT PRIOR TO FRAMING INFILL WD STUDS.

SECTION DETAIL 9
SCALE: 3" = 1'-0"

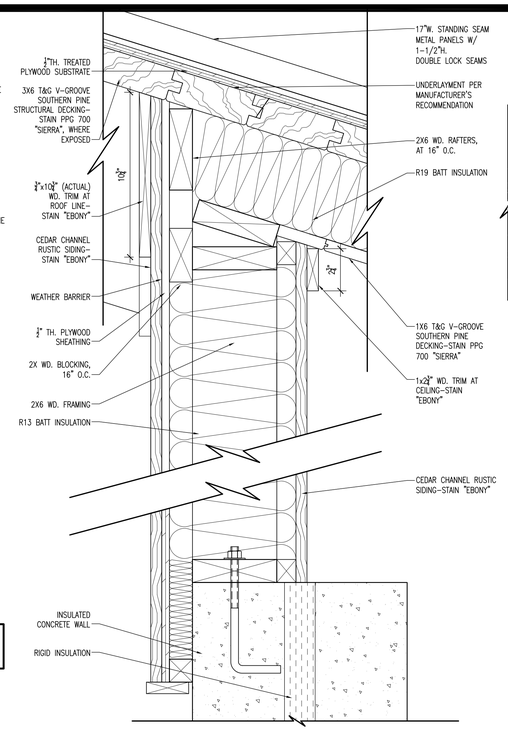

SECTION DETAIL 8
SCALE: 3" = 1'-0"

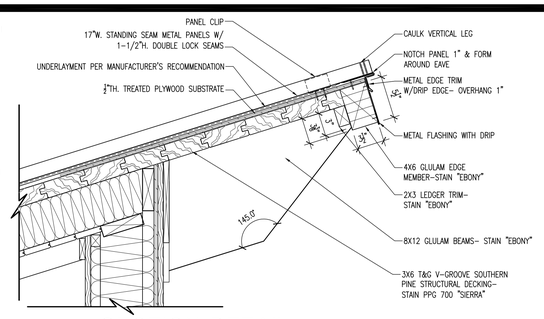

SECTION DETAIL 11
SCALE: 1 1/2" = 1'-0"

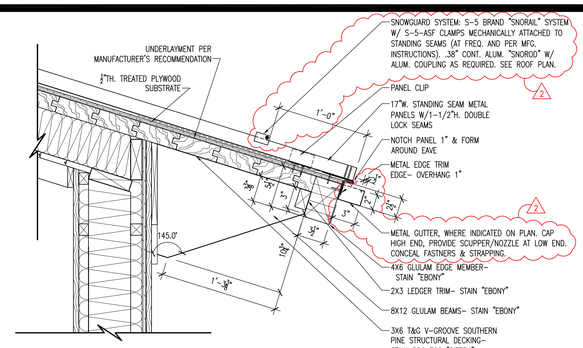

SECTION DETAIL 10
SCALE: 1 1/2" = 1'-0"

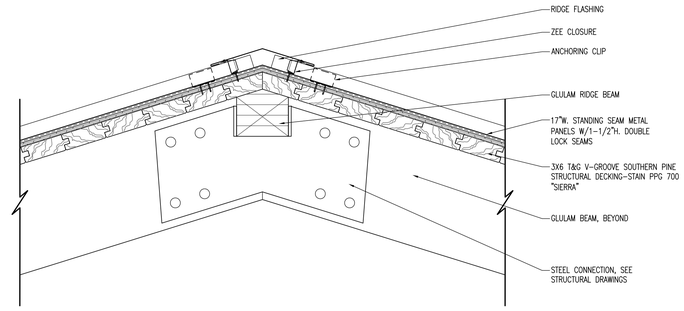

SECTION DETAIL 7
SCALE: 1 1/2" = 1'-0"

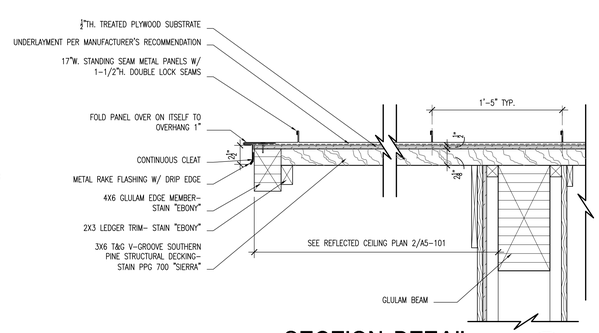

SECTION DETAIL 6
SCALE: 1 1/2" = 1'-0"

GLULAM PRESERVATIVE TREATMENT

1. ALL GLULAM MEMBERS TO BE FINISHED WITH POLYURETHANE FINISH PER SPECIFICATIONS.
2. ALL COLUMNS, BEAMS, FLY RAFTERS AND DECKING TO BE PRESERVATIVE TREATED.

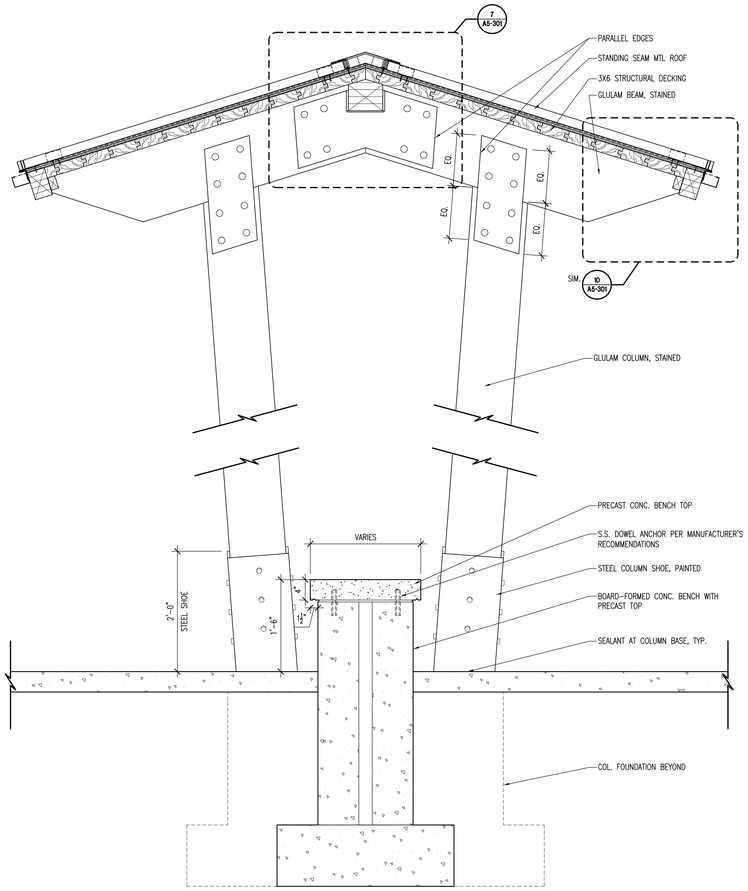

COLUMN SECTION 4
SCALE: 1" = 1'-0"

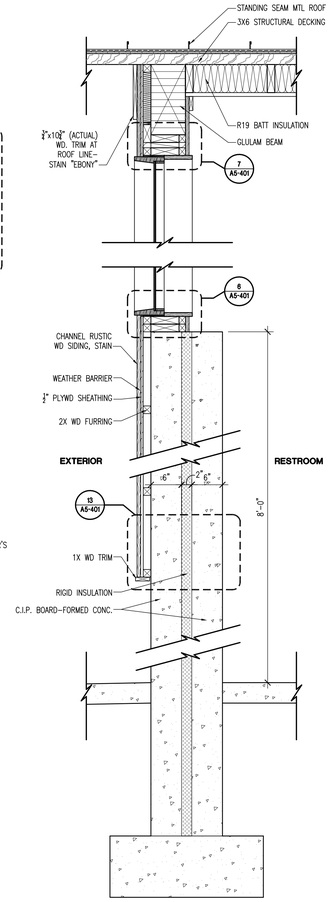

WALL SECTION 3
SCALE: 1" = 1'-0"

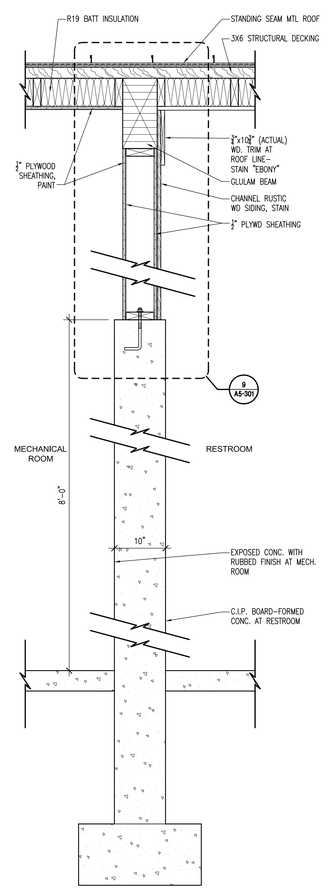

WALL SECTION 2
SCALE: 1" = 1'-0"

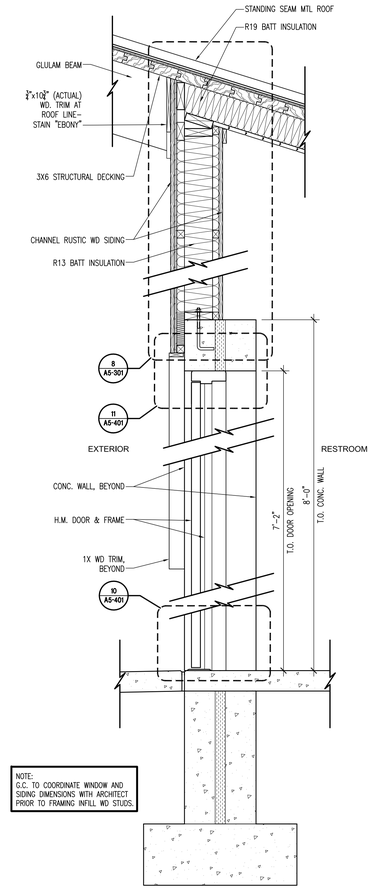

NOTE:
G.C. TO COORDINATE WINDOW AND SIDING DIMENSIONS WITH ARCHITECT PRIOR TO FRAMING INFILL WD STUDS.

WALL SECTION 1
SCALE: 1" = 1'-0"

JAMES J. WALTERS REGISTERED COMMONWEALTH OF KENTUCKY LICENSED ARCHITECT

Architecture
Engineering
Planning

815 West Market Street, Suite 200, Louisville, Kentucky 40202
Phone (502) 584-9900 Fax (502) 584-0629 www.bravura.com
Kentucky · Indiana · Georgia · West Virginia · Tennessee · Florida

LANDSCAPE ARCHITECT
Wallace Roberts & Todd, LLC
1700 Market Street
28th Floor
Philadelphia, PA 19103
tel 215.732.5215
fax 215.732.2551

Architect
BRAVURA
111 West Washington Street
Louisville, Kentucky 40202
T: (502) 584-9900
F: (502) 584-0629

The Parklands of Floyds Fork, Project 4A

The Strand, Turkey Run Park and Broad Run Park
Louisville, Kentucky

Owner:
21st Century Parks, Inc.
371 W. Main St., Suite 202
Louisville, Kentucky 40202

REV #	DATE	DESCRIPTION
	05/09/2013	ISSUED FOR BID
1	05/30/2013	ADDENDUM #2: (1) ADDED SNOW GUARD TO ROOF DTL. #10
		(2) ADDED METAL GUTTER TO ROOF DTL. #10

Job No:	155-617
Date:	May 30, 2013
Scale:	As Shown
Drawn By:	

ISSUED FOR ADDENDUM #2

Drawing Title:

Parklands of Floyds Fork
PROJECT 4A
Seaton Valley
2-Hole Trailhead
Wall Sections & Details

Drawing No:

A5-301

May 29, 2013 - 5:50pm
Z:\Drawings\KY155-Floyds Fork\KY155-617 Project 4\STructures\2-Hole Restroom Seatonville\A5-301.dwg (A5-301)

GLULAM PRESERVATIVE TREATMENT

1. ALL GLULAM MEMBERS TO BE FINISHED WITH POLYURETHANE FINISH PER SPECIFICATIONS.
2. ALL COLUMNS, BEAMS, FLY RAFTERS AND DECKING TO BE PRESERVATIVE TREATED.

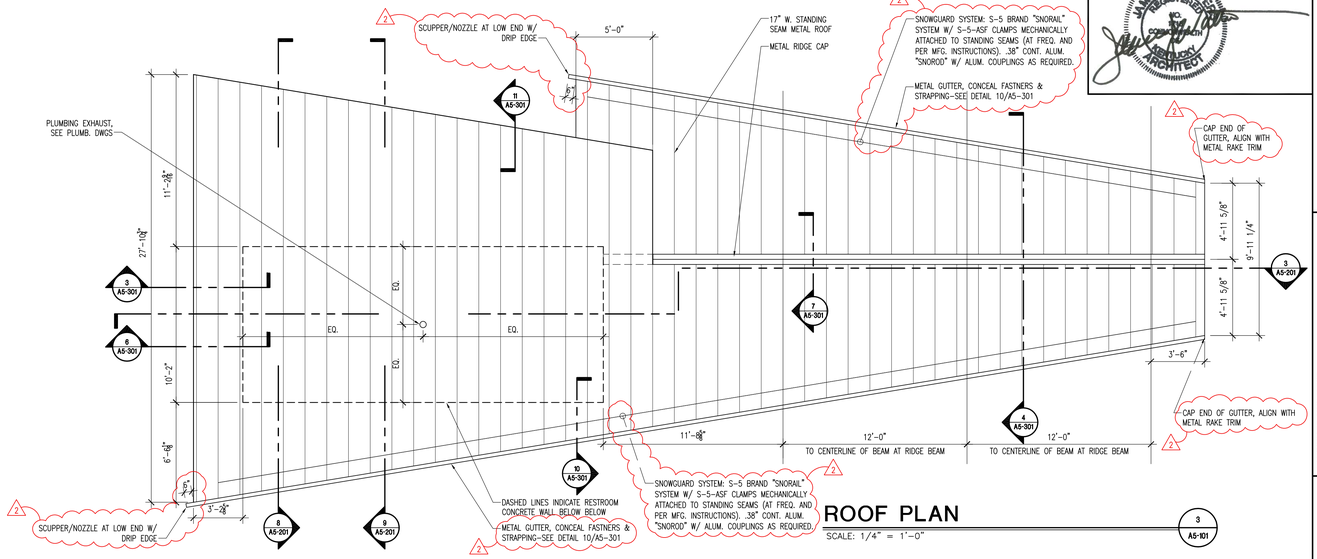

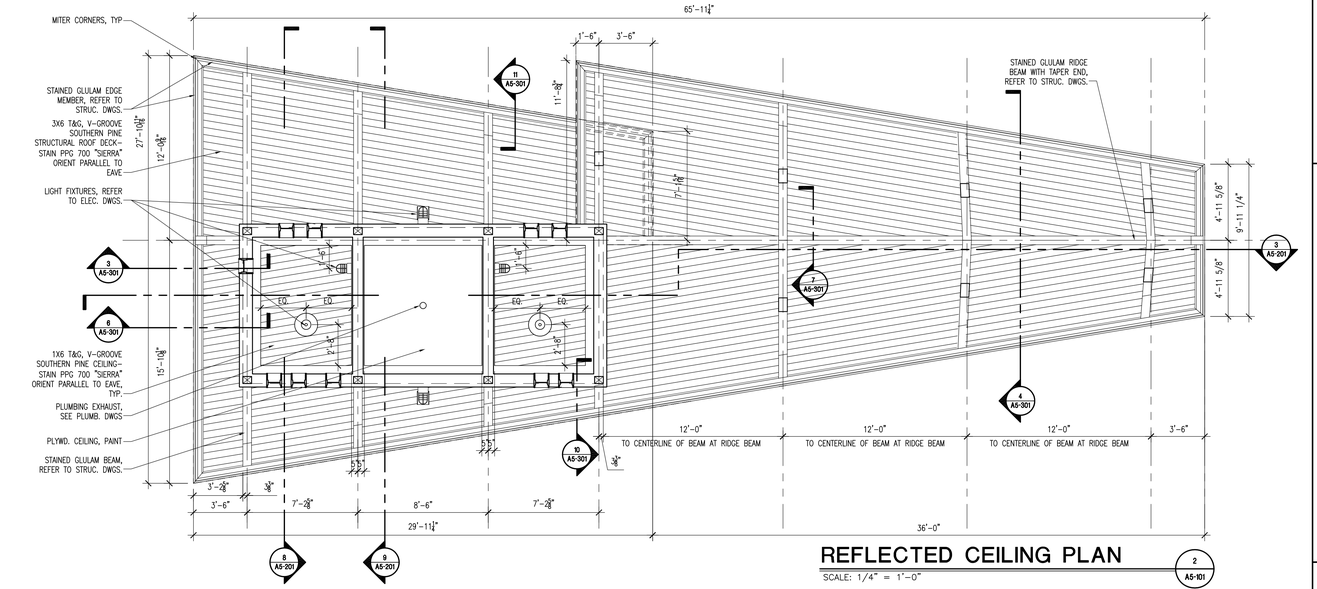

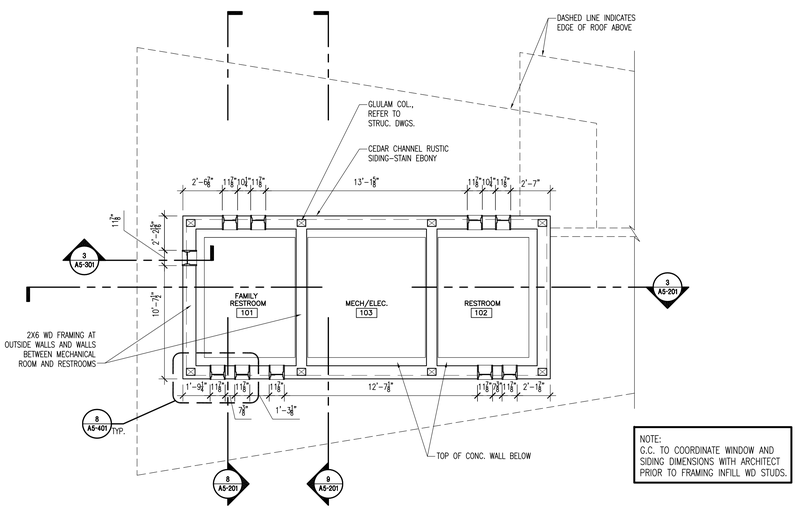

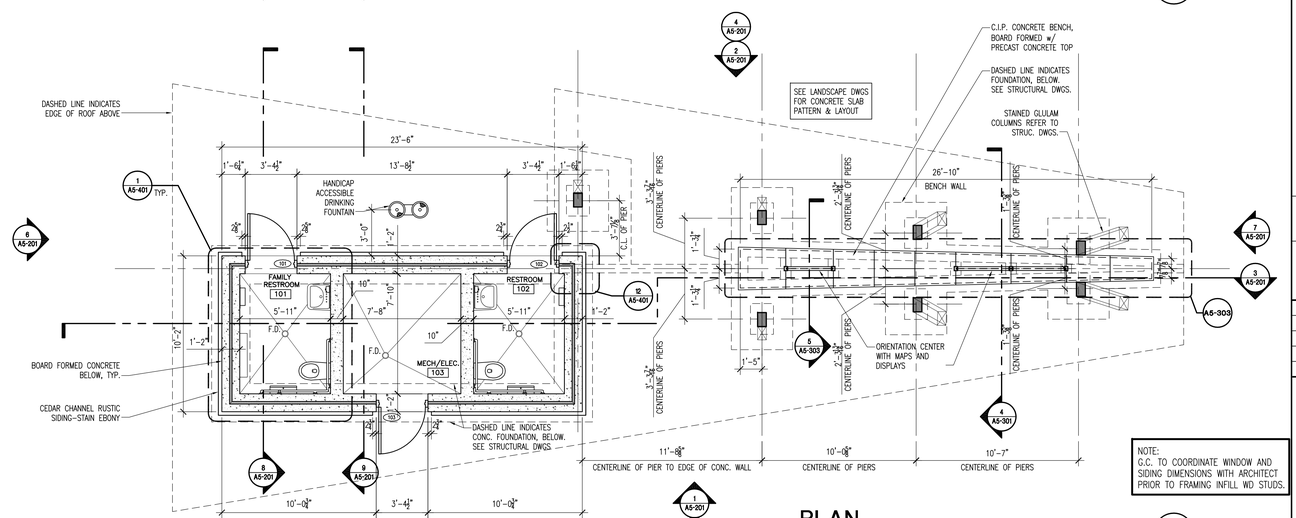

JAMES J. WALTZ REGISTERED NO. 9327 SCOTTISH RITE REALTOR® ARCHITECT

Architecture
Engineering
Planning

815 West Market Street, Suite 300 Louisville, Kentucky 40202
Phone: 502-585-2222 Facsimile: 502-992-0905 Internet: www.qk4.com
Kentucky · Indiana · Georgia · West Virginia · Tennessee · Florida

LANDSCAPE ARCHITECT
WRT
Wallace Roberts & Todd, LLC
1700 Market Street
28th Floor
Philadelphia, PA 19103
tel 215.732.5215
fax 215.732.2551

Architect
BRAVURA
111 West Washington Street
Louisville, Kentucky 40202
T: (502) 584-6000
F: (502) 584-0829

The Parklands of Floyds Fork, Project 4A

The Strand, Turkey Run Park and Broad Run Park
Louisville, Kentucky

Owner:
21st Century Parks, Inc.
371 W. Main St., Suite 202
Louisville, Kentucky 40202

REV #	DATE	DESCRIPTION
	05/09/2013	ISSUED FOR MID
1	05/30/2013	ADDENDUM #2: (1) ADDED SNOW GUARD TO ROOF PLAN
		(2) ADDED METAL GUTTER TO ROOF PLAN

Job No: 155-617
Date: May 30, 2013
Scale: As Shown
Drawn By:
ISSUED FOR ADDENDUM #2

Drawing Title:
Parklands of Floyds Fork

PROJECT 4A
Seaton Valley
2-Hole Trailhead
Plans

Drawing No:
A5-101

May 29, 2013 – 3:35pm
Z:\Drawings\KY155-Floyds Fork\KY155-617 Project 4\Structures\2-Hole Restroom Seaton\ArchVis\A5-101.dwg (A5-101)

GLULAM PRESERVATIVE TREATMENT

1. ALL GLULAM MEMBERS TO BE FINISHED WITH POLYURETHANE FINISH PER SPECIFICATIONS.
2. ALL COLUMNS, BEAMS, FLY RAFTERS AND DECKING TO BE PRESERVATIVE TREATED.

LIGHTNING PROTECTION SYSTEM GENERAL NOTES:

1. CONCEAL ALUM. CABLING WHEREVER POSSIBLE.IN LOCATIONS THAT REQUIRE EXPOSED CONDUIT,COORDINATE ROUTING, FOR APPROVAL, WITH ARCHITECT. ALL CABLING EXPOSED TO SITE SHALL BE CONCEALED IN PAINTED CONDUIT AND ROUTED PER APPROVAL OF ARCHITECT.
2. THE LIGHTNING PROTECTION INSTALLER SHALL BE RESPONSIBLE FOR VERIFYING SITE CONDITIONS AS REQUIRED FOR BONDING IN ACCORDANCE WITH THE NATIONAL STANDARDS NFPA 780 & UL 96A AS REQUIRED FOR SYSTEM CERTIFICATION.
3. SECONDARY SURGE ARRESTORS OR TVSS LISTED FOR LPS ARE REQUIRED ON THE MAIN ELECTRICAL SERVICE PANEL. DATA, TELEPHONE AND ANTENNA SERVICE PROTECTION ARE ALSO REQUIRED BY ELECTRICAL CONTRACTOR OR VARIOUS UTILITY AGENCIES.
4. TELEPHONE AND OR ELECTRICAL SERVICE ENTRANCE GROUNDS SHALL BE INTERCONNECTED TO ONE LIGHTNING PROTECTION GROUND OR WATER PIPE.
5. METAL BODIES OF INDUCTANCE LOCATED ABOUT THE ROOF SUCH AS: METAL FLASHING, ROOF DRAINS, SOIL PIPES, VENTS, ETC. LOCATED WITHIN 6' OF A LIGHTNING CONDUCTOR OR BONDED METAL BODY SHALL BE INTERCONNECTED TO THE LIGHTNING CONDUCTOR SYSTEM.
6. NO BEND OF A CONDUCTOR SHALL FORM A FINAL INCLUDED ANGLE OF LESS THAN 90° NOR SHALL HAVE A RADIUS OF OF BEND OF LESS THAN 8".
7. CONDUCTORS SHALL INTERCONNECT ALL AIR TERMINALS AND SHALL FORM A TWO-WAY PATH FROM EACH AIR TERMINAL HORIZONTALLY OR DOWNWARD TO CONNECTIONS WITH GROUND TERMINALS.
8. ALL LIGHTNING PROTECTION TERMINALS SHALL BE FASTENED NOT MORE THAN 3' MAXIMUM SPACING.
9. GROUND RODS SHALL BE DRIVEN TO A MINIMUM DEPTH OF 10' BELOW GRADE AND 2' AWAY FROM FOUNDATION WALLS.
10. CONNECTIONS TO GROUND LOOP CONDUCTOR SHALL BE MADE AT A POINT NOT LESS THAN 18" BELOW GRADE AND 2' AWAY FROM FOUNDATION WALL.
11. AIR TERMINALS SHALL BE PLACED AT ALL UNPROTECTED OUTSIDE CORNERS AND LOCATED INTERMEDIATELY ON 20' MAX. SPACING AROUND THE ROOF PERIMETER AND WITHIN 2' OF OUTSIDE EDGE.
12. BOND ALL METALLIC PIPES INCLUDING WATER, SEWER, STORM, ETC. WHICH ENTER THE STRUCTURE.
13. THE LIGHTNING PROTECTION SYSTEM SHALL BE INSTALLED IN A NEAT AND INCONSPICUOUS MANNER AND AS APPROVED BY ARCHITECT.
14. SEAL ENDS OF CONDUIT MOISTURE TIGHT WITH DUCT SEAL OR LEAD WEDGE.
15. THE LAYOUT FOR THESE SYSTEMS ARE SCHEMATIC AND INTENDED TO SHOW BASIC SYSTEM LAYOUT. CONTRACTOR SHALL PROVIDE SHOP DRAWINGS WITH FULL SYSTEM AND DETAILS FOR APPROVAL.

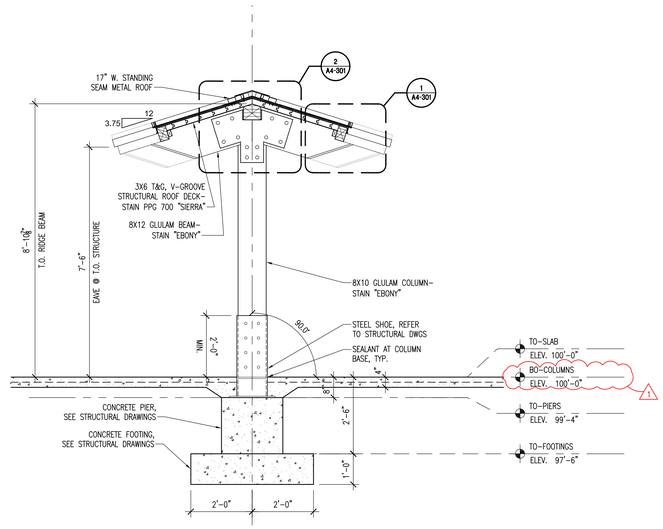

SECTION
SCALE: 1/2"=1'-0"
7 A4-101

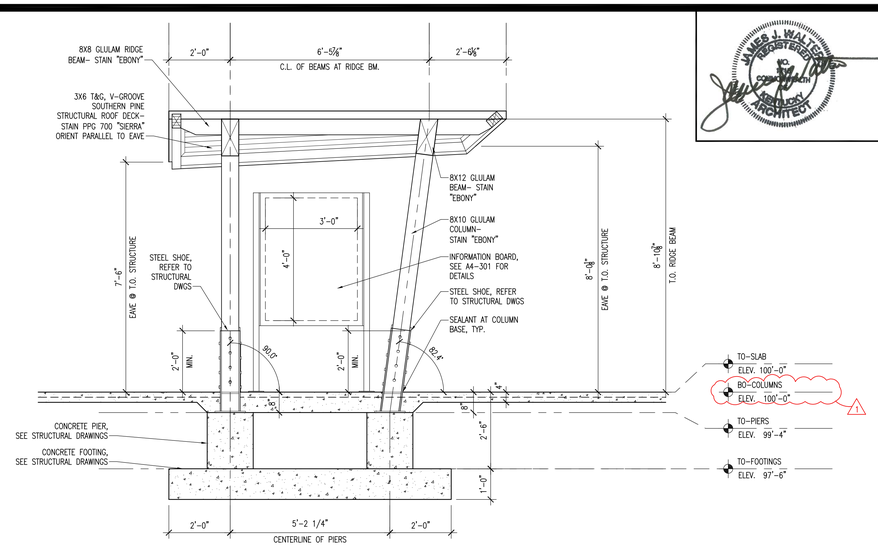

SECTION
SCALE: 1/2"=1'-0"
6 A4-101

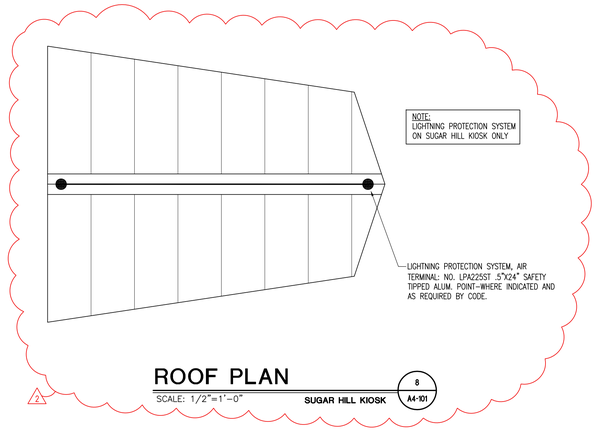

ROOF PLAN
SCALE: 1/2"=1'-0"
SUGAR HILL KIOSK
8 A4-101

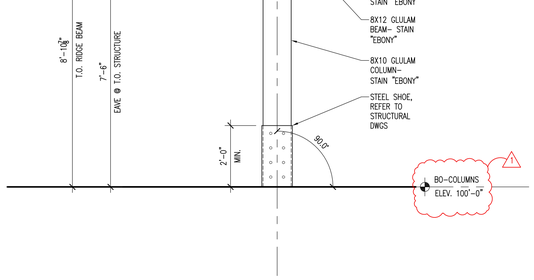

ELEVATION
SCALE: 1/2"=1'-0"
5 A4-101

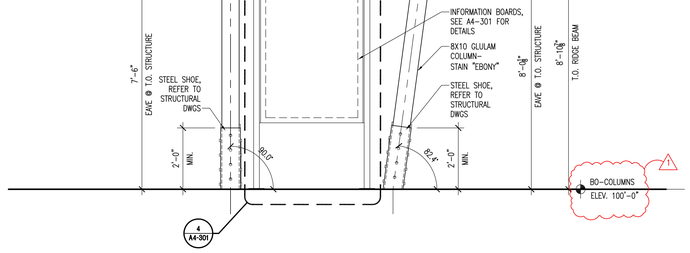

ELEVATION
SCALE: 1/2"=1'-0"
4 A4-101

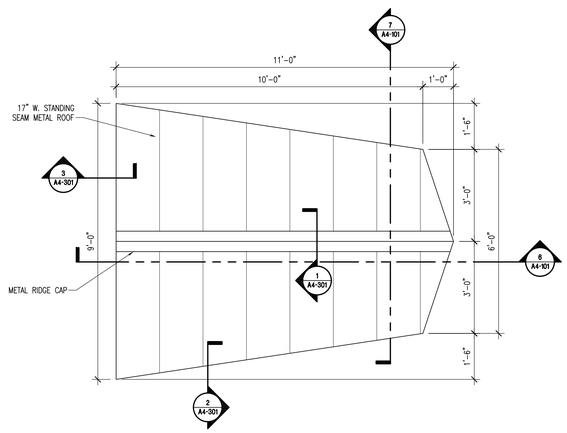

ROOF PLAN
SCALE: 1/2"=1'-0"
3 A4-101

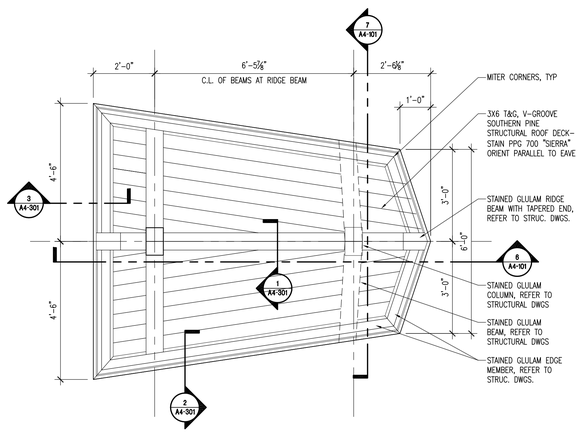

REFLECTED CEILING
SCALE: 1/2"=1'-0"
2 A4-101

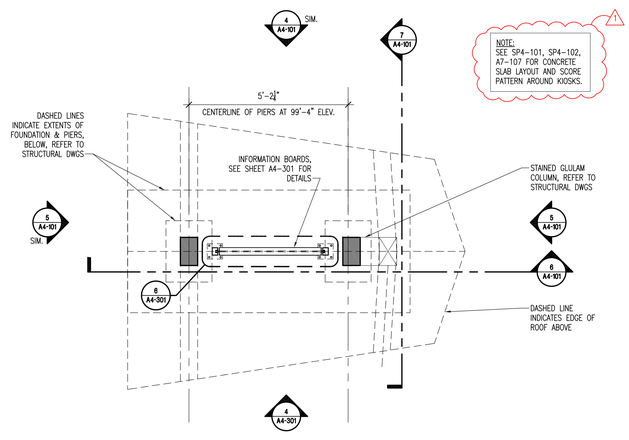

PLAN
SCALE: 1/2"=1'-0"
1 A4-101

JAMES J. WALTZ
REGISTERED
No. 9252
SCOTT COUNTY
KENTUCKY
ARCHITECT

Architecture
Engineering
Planning

815 West Market Street, Suite 300 Louisville, Kentucky 40202
Phone: 502-585-2222 Facsimile: 502-992-0905 Internet: www.qk4.com
Kentucky · Indiana · Georgia · West Virginia · Tennessee · Florida

LANDSCAPE ARCHITECT
WRT
Wallace Roberts & Todd, LLC
1700 Market Street
28th Floor
Philadelphia, PA 19103
tel 215.732.5215
fax 215.732.2551

Architect
BRAVURA
111 West Washington Street
Louisville, Kentucky 40202
T: (502) 584-0829
F: (502) 584-0829

The Parklands of Floyds Fork, Project 4A
The Strand, Turkey Run Park and Broad Run Park
Louisville, Kentucky

Owner:
21st Century Parks, Inc.
371 W. Main St., Suite 202
Louisville, Kentucky 40202

REV #	DATE	DESCRIPTION
	05/08/2013	ISSUED FOR IBD
1	05/23/2013	ADDENDUM #1 (1) REVISED BOTTOM OF GLULAM COLUMN (2) REVISED DRAWING NUMBERS IN NOTE
2	05/29/2013	ADDENDUM #2: ADDED LIGHTNING PROTECTION TO SUGAR HILL KIOSK ROOF PLAN

Job No: 155-617
Date: May 30, 2013
Scale: As Shown
Drawn By:
ISSUED FOR ADDENDUM #2

Drawing Title:
Parklands of Floyds Fork
PROJECT 4A
Sugar Hill, Silo Center & Big Vista Kiosks
Plans, Elevations, & Sections

Drawing No:
A4-101

May 29, 2013 - 9:31pm
Z:\Drawings\KY155-Floyds Fork\KY155-017 Project 4\Structures\Kiosk-Sugar Hill\A4-101-A4-301_Kiosks.dwg (A4-101)

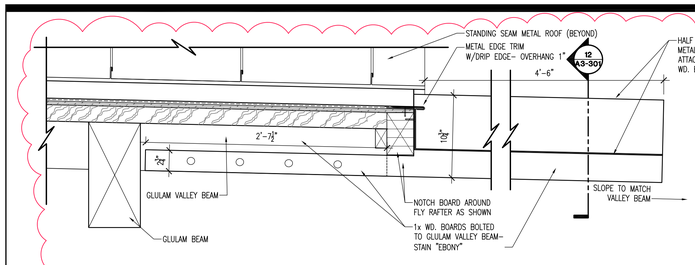

SECTION DETAIL 13 A3-301
SCALE: 1 1/2" = 1'–0"

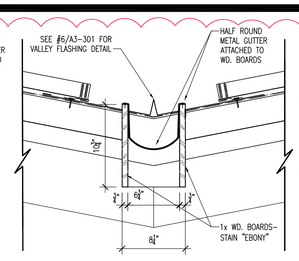

SECTION DETAIL 12 A3-301
SCALE: 1 1/2" = 1'–0"

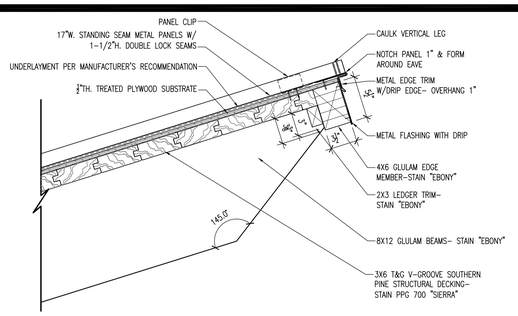

SECTION DETAIL 8 A3-301
SCALE: 1 1/2" = 1'–0"

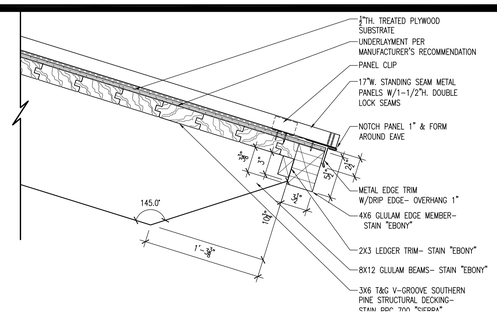

SECTION DETAIL 7 A3-301
SCALE: 1 1/2" = 1'–0"

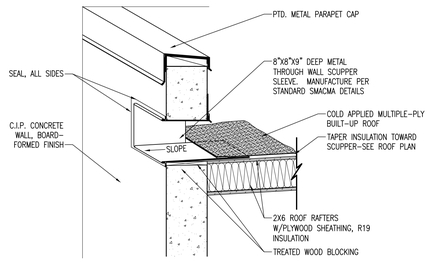

SECTION DETAIL 10 A3-301
SCALE: N.T.S. ● SCUPPER

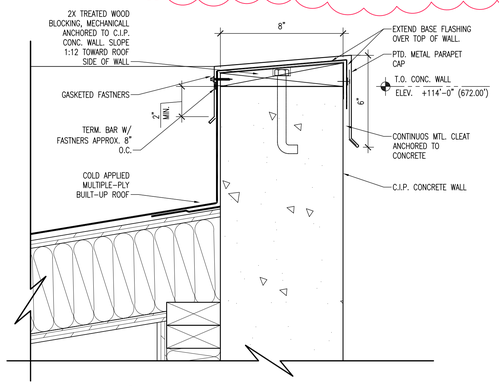

SECTION DETAIL 9 A3-301
SCALE: 3" = 1'–0" ● PARAPET

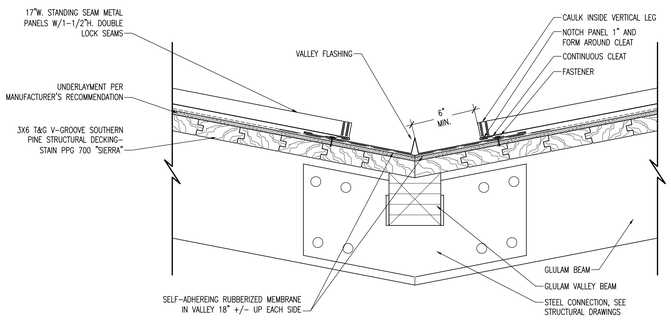

SECTION DETAIL 6 A3-301
SCALE: 1 1/2" = 1'–0"

GLULAM PRESERVATIVE TREATMENT

1. ALL GLULAM MEMBERS TO BE FINISHED WITH POLYURETHANE FINISH PER SPECIFICATIONS.
2. ALL COLUMNS, BEAMS, FLY RAFTERS AND DECKING TO BE PRESERVATIVE TREATED.

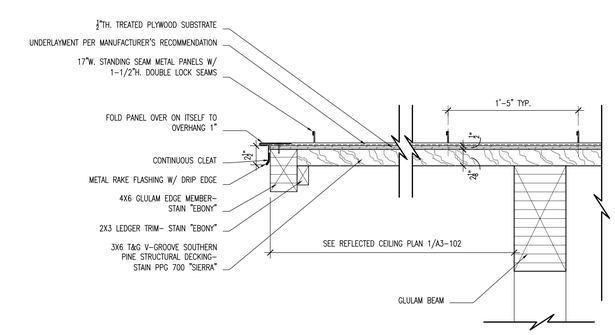

SECTION DETAIL 5 A3-301
SCALE: 1 1/2" = 1'–0"

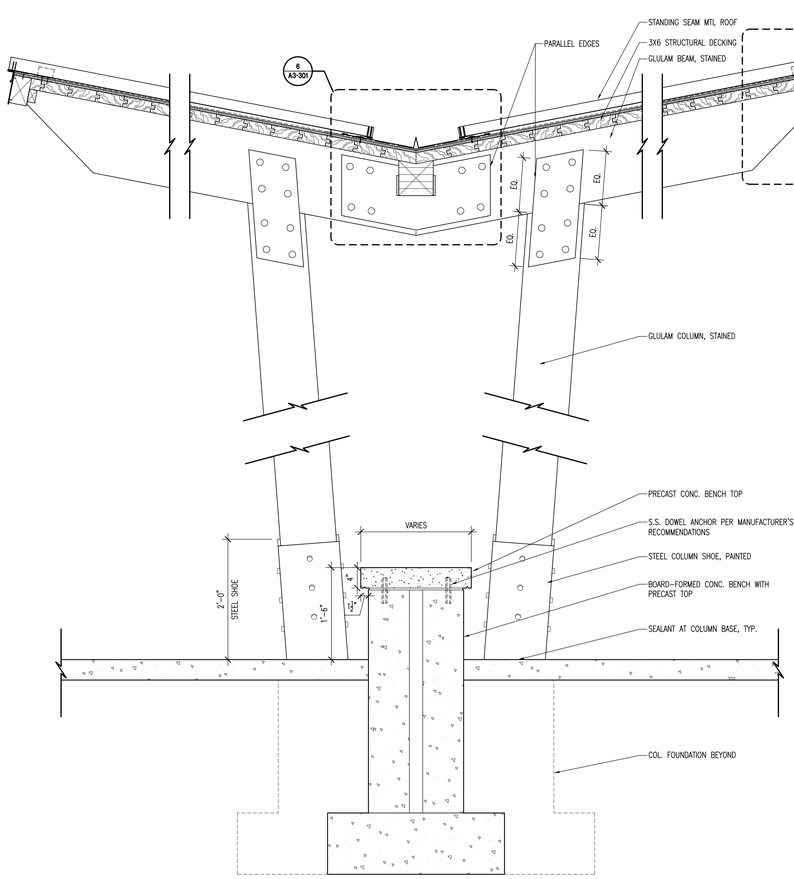

COLUMN SECTION 11 A3-301
SCALE: 1" = 1'–0"

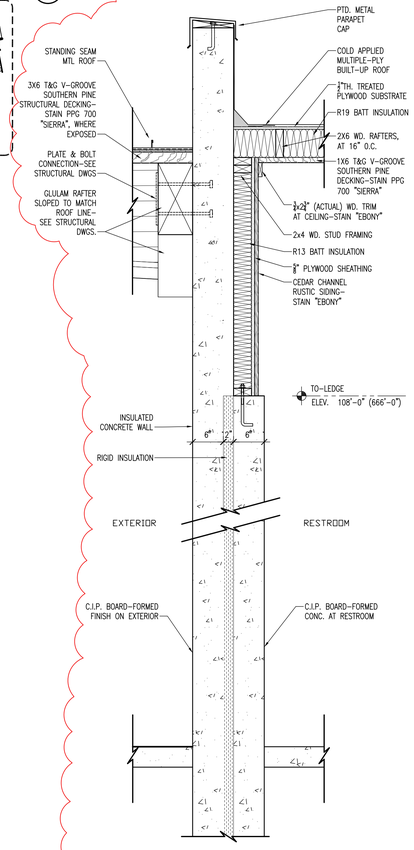

WALL SECTION 4 A3-301
SCALE: 1" = 1'–0"

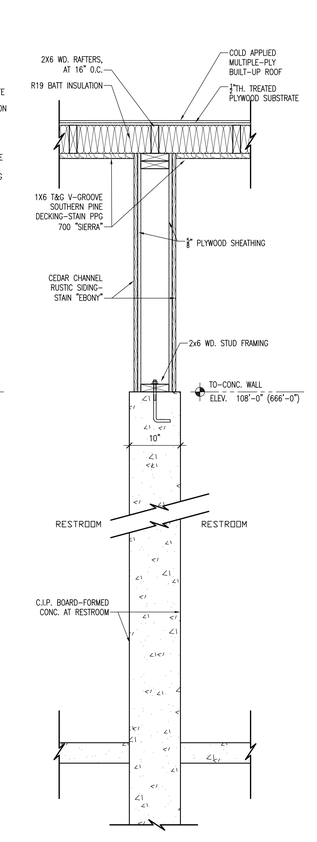

WALL SECTION 3 A3-301
SCALE: 1" = 1'–0"

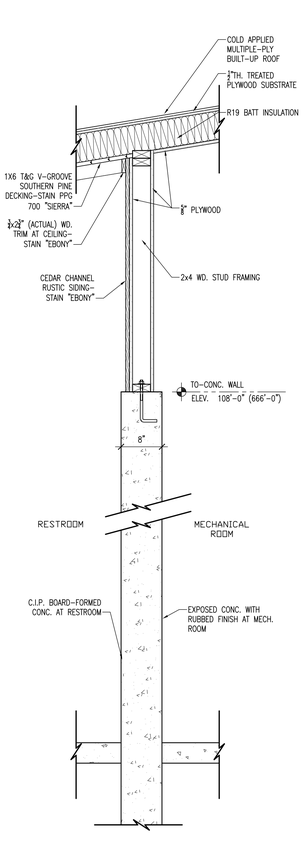

WALL SECTION 2 A3-301
SCALE: 1" = 1'–0"

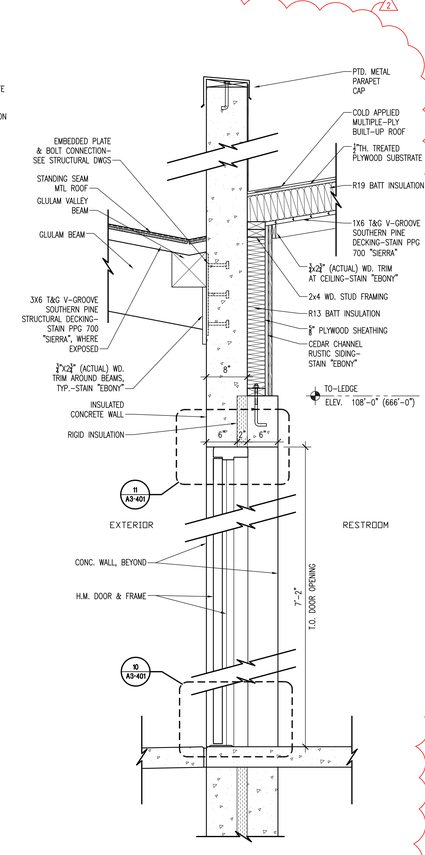

WALL SECTION 1 A3-301
SCALE: 1" = 1'–0"

Architecture
Engineering
Planning

815 West Market Street, Suite 200, Louisville, Kentucky 40202
Phone 502.584.7200 Fax 502.584.7208 www.qkpartners.com
Kentucky · Indiana · Georgia · West Virginia · Tennessee · Florida

JAMES J. WALTERS REGISTERED COMMONWEALTH OF KENTUCKY LANDSCAPE ARCHITECT

LANDSCAPE ARCHITECT
WRT

Wallace Roberts & Todd, LLC
1700 Market Street
28th Floor
Philadelphia, PA 19103
tel 215.732.5215
fax 215.732.2551

Architect
BRAVURA
111 West Washington Street
Louisville, Kentucky 40202
T: (502) 584-9900
F: (502) 584-0629

The Parklands of Floyds Fork, Project 4A

The Strand, Turkey Run Park and Broad Run Park
Louisville, Kentucky

Owner:
21st Century Parks, Inc.
371 W. Main St., Suite 202
Louisville, Kentucky 40202

REV #	DATE	DESCRIPTION
	05/09/2013	ISSUED FOR BID
1	05/30/2013	ADDENDUM #2: (1) ADDED WALL SECTIONS
		(2) ADDED METAL GUTTER DETAIL

Job No:	155-617
Date:	May 30, 2013
Scale:	As Shown
Drawn By:	

ISSUED FOR ADDENDUM #2

Drawing Title:

Parklands of Floyds Fork

PROJECT 4A
Silo Center
4-Hole Trailhead
Wall Sections
& Details

Drawing No:

A3-301

May 31, 2013 – 10:37am
Z:\Drawings\KY155–Floyds Fork\KY155–617 Project 4A\Structures\Silo Center 4–Hole Restroom\A3–301.dwg (A3–301)

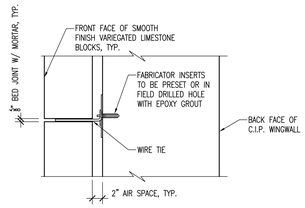

DETAIL

SCALE: 1"=1'-0"

12 A3-203

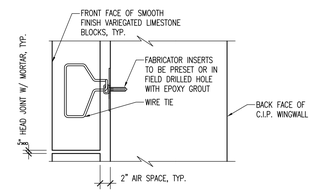

DETAIL

SCALE: 1"=1'-0"

13 A3-203

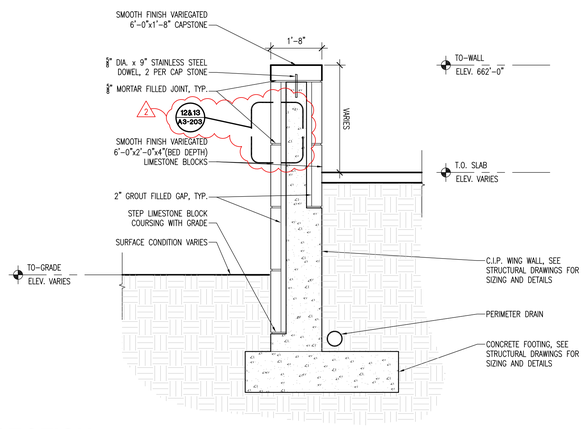

SECTION

SCALE: 1/2" = 1'-0"

LIMESTONE CLAD CONCRETE RETAINING WALL

1 A3-203

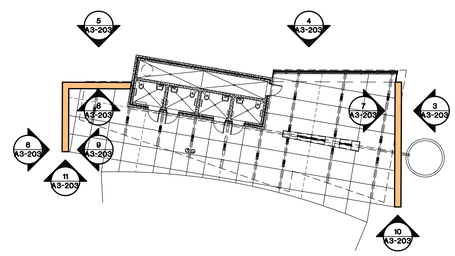

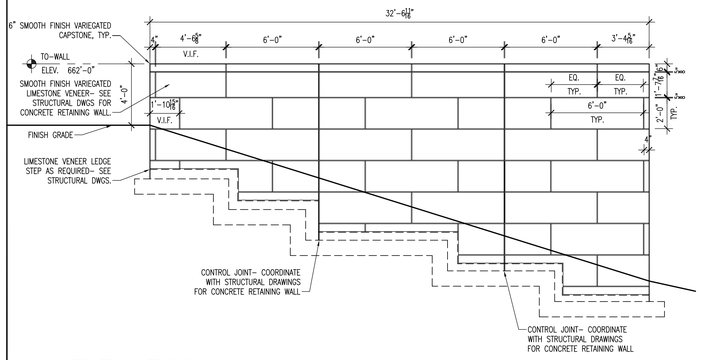

ELEVATION

SCALE: 1/4" = 1'-0"

LIMESTONE CLAD WALL

3 A3-203

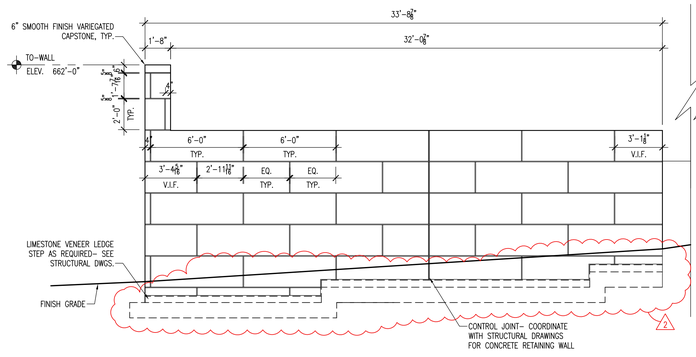

ELEVATION

SCALE: 1/4" = 1'-0"

LIMESTONE CLAD WALL

4 A3-203

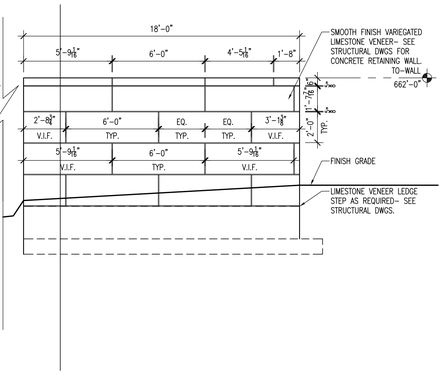

ELEVATION

SCALE: 1/4"=1'-0"

5 A3-203

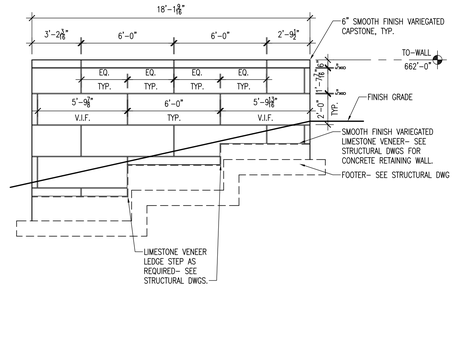

ELEVATION

SCALE: 1/4"=1'-0"

6 A3-203

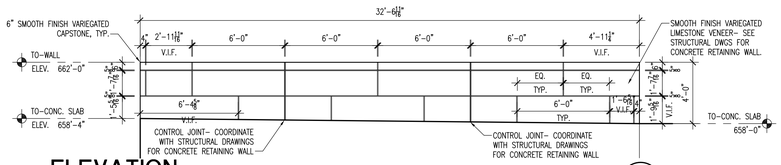

ELEVATION

SCALE: 1/4" = 1'-0"

LIMESTONE CLAD WALL

7 A3-203

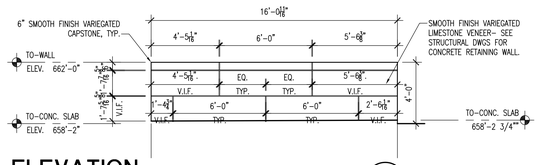

ELEVATION

SCALE: 1/4"=1'-0"

8 A3-203

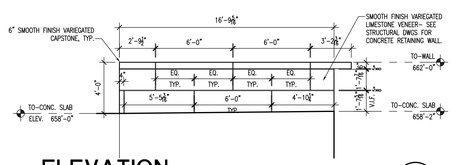

ELEVATION

SCALE: 1/4"=1'-0"

9 A3-203

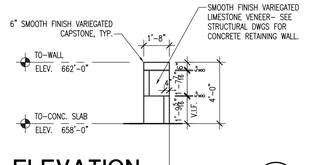

ELEVATION

SCALE: 1/4"=1'-0"

10 A3-203

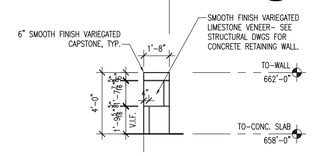

ELEVATION

SCALE: 1/4"=1'-0"

11 A3-203

Architecture
Engineering
Planning

815 West Market Street, Suite 200, Louisville, Kentucky 40202
Phone: (502) 584-6300 Fax: (502) 584-6329 www.mindel.com
Kentucky · Indiana · Georgia · West Virginia · Tennessee · Florida

LANDSCAPE ARCHITECT
WRT
Wallace Roberts & Todd, LLC
1700 Market Street
28th Floor
Philadelphia, PA 19103
tel 215.732.5215
fax 215.732.2551

Architect
BRAVURA
111 West Washington Street
Louisville, Kentucky 40202
T: (502) 584-9900
F: (502) 584-0629

The Parklands of Floyds Fork, Project 4A

The Strand, Turkey Run Park and Broad Run Park
Louisville, Kentucky

Owner:
21st Century Parks, Inc.
371 W. Main St., Suite 202
Louisville, Kentucky 40202

REV #	DATE	DESCRIPTION
	05/08/2013	ISSUED FOR BID
1	05/30/2013	ADDENDUM #2: (1) REVISED STEPPED FOOTING (2)ADDED DETAIL TAG

Job No: 155-617
Date: May 30, 2013
Scale: As Shown
Drawn By:

ISSUED FOR ADDENDUM #2

Drawing Title:

Parklands of Floyds Fork

PROJECT 4A
Silo Center
4-Hole Trailhead
Elevations

Drawing No:

A3-203

May 29, 2013 - 3:24pm
Z:\Drawings\KY155-Floyds Fork\KY155-617 Project 4\Structures\Silo Center 4-Hole Restroom\A3-201 -A3-202.dwg (A3-203)

GENERAL NOTES

1. ALL VERTICAL DIMENSIONS ARE TAKEN FROM THE BENCHMARK (100'-0") ELEVATION OF 658.00'.

GLULAM PRESERVATIVE TREATMENT

1. ALL GLULAM MEMBERS TO BE FINISHED WITH POLYURETHANE FINISH PER SPECIFICATIONS.
2. ALL COLUMNS, BEAMS, FLY RAFTERS AND DECKING TO BE PRESERVATIVE TREATED.

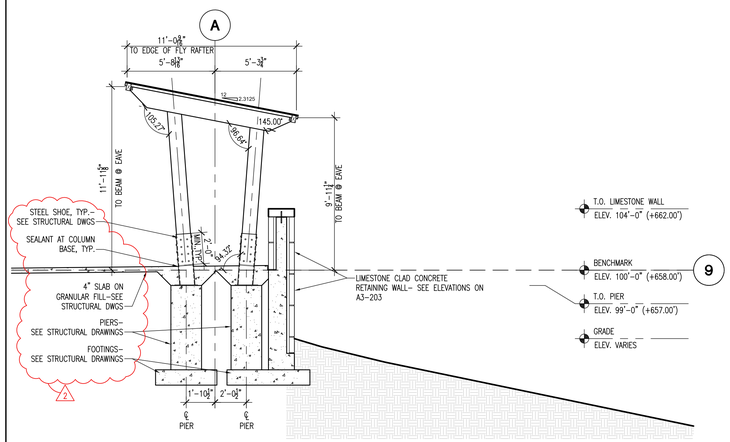

SECTION

SCALE: 1/4" = 1'-0"

⊕ COLUMN LINE 9 — 9 / A3-202

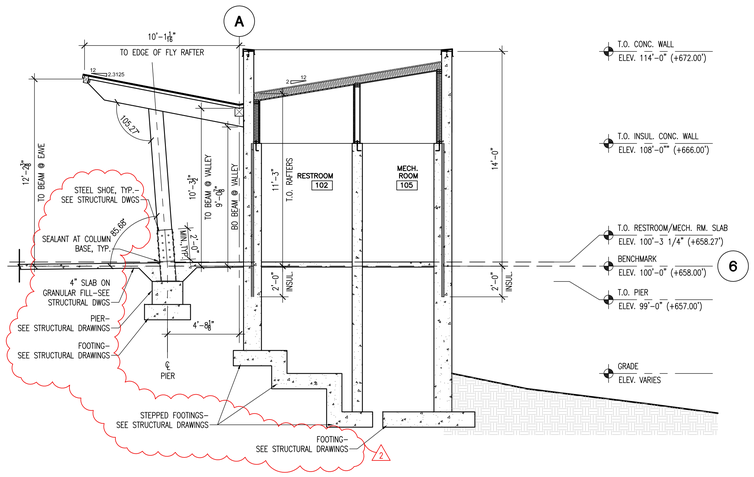

SECTION

SCALE: 1/4" = 1'-0"

⊕ COLUMN LINE 6 — 6 / A3-202

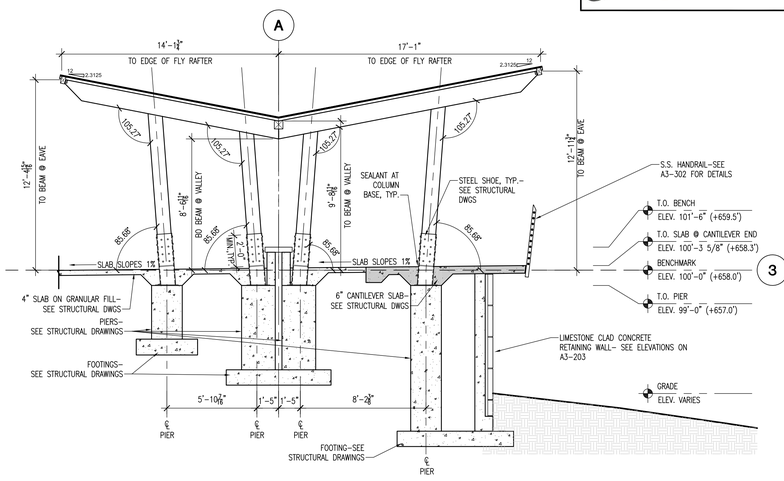

SECTION

SCALE: 1/4" = 1'-0"

⊕ COLUMN LINE 3 — 3 / A3-202

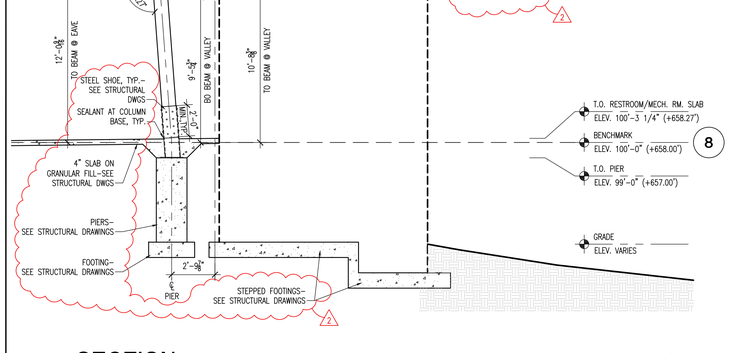

SECTION

SCALE: 1/4" = 1'-0"

⊕ COLUMN LINE 8 — 8 / A3-202

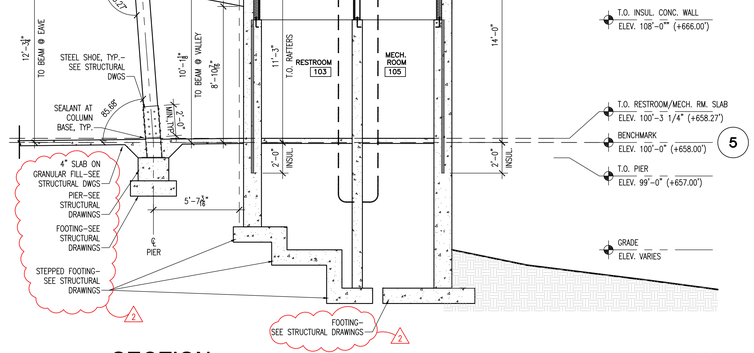

SECTION

SCALE: 1/4" = 1'-0"

⊕ COLUMN LINE 5 — 5 / A3-202

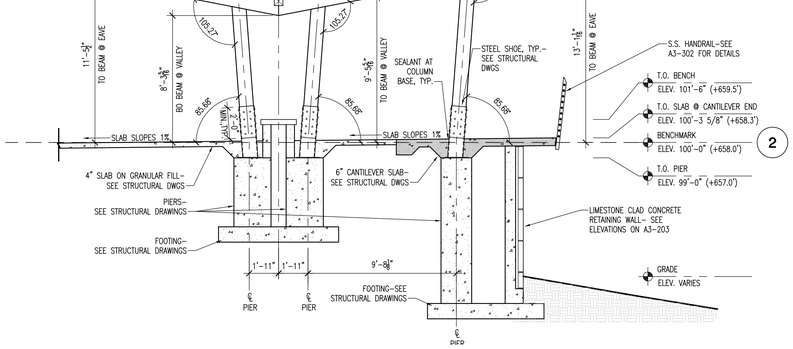

SECTION

SCALE: 1/4" = 1'-0"

⊕ COLUMN LINE 2 — 2 / A3-202

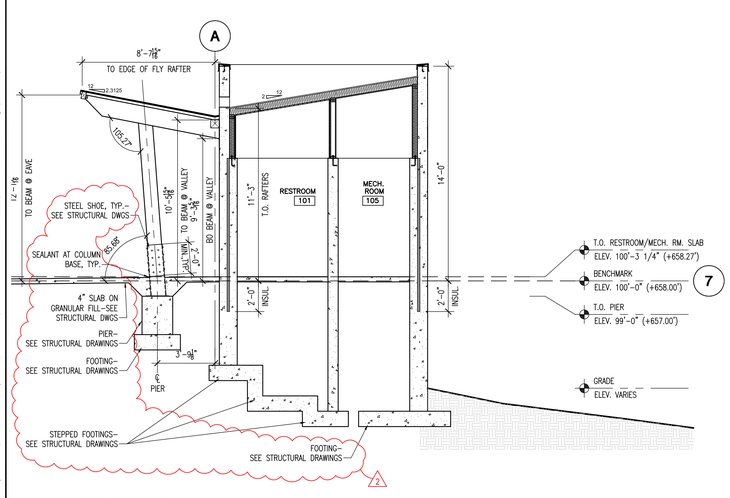

SECTION

SCALE: 1/4" = 1'-0"

⊕ COLUMN LINE 7 — 7 / A3-202

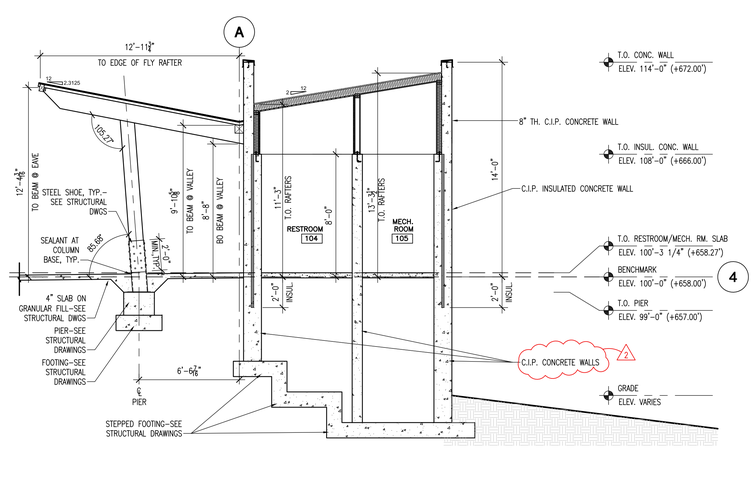

SECTION

SCALE: 1/4" = 1'-0"

⊕ COLUMN LINE 4 — 4 / A3-202

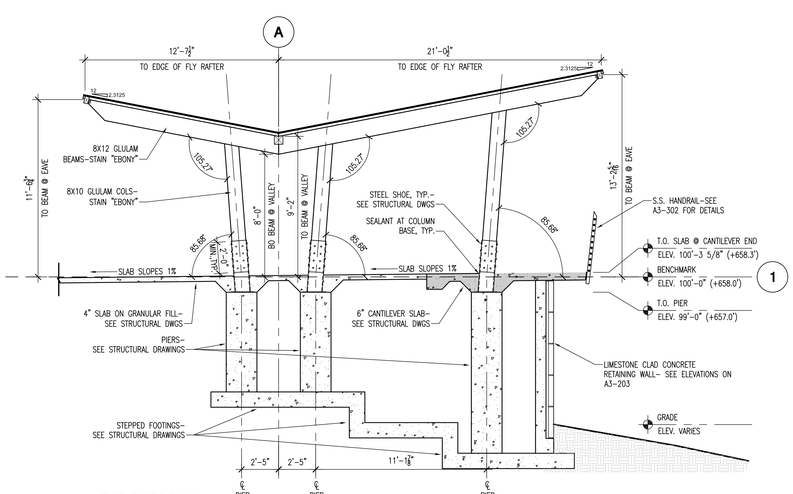

SECTION

SCALE: 1/4" = 1'-0"

⊕ COLUMN LINE 1 — 1 / A3-202

JAMES J. WALTERS REGISTERED ARCHITECT

Architecture
Engineering
Planning

815 West Market Street, Suite 300, Louisville, Kentucky 40202
Phone: 502.584.6300 Fax: 502.584.6555 www.qkpsc.com
Kentucky · Indiana · Georgia · West Virginia · Tennessee · Florida

LANDSCAPE ARCHITECT
Wallace Roberts & Todd, LLC
1700 Market Street
28th Floor
Philadelphia, PA 19103
tel 215.732.5215
fax 215.732.2551

Architect
BRAVURA
111 West Washington Street
Louisville, Kentucky 40202
T: (502) 584-9900
F: (502) 584-0829

The Parklands of Floyds Fork, Project 4A

The Strand, Turkey Run Park and Broad Run Park
Louisville, Kentucky

Owner:
21st Century Parks, Inc.
371 W. Main St., Suite 202
Louisville, Kentucky 40202

REV #	DATE	DESCRIPTION
	05/09/2013	ISSUED FOR BID
1	05/30/2013	ADDENDUM #2: ADDED ADDITIONAL NOTES AND DETAIL TAGS

Job No:	155-617
Date:	May 30, 2013
Scale:	As Shown
Drawn By:	

ISSUED FOR ADDENDUM #2

Drawing Title:

Parklands of Floyds Fork

PROJECT 4A
Silo Center
4-Hole Trailhead
Sections

Drawing No:

A3-202

May 30, 2013 - 6:21pm
Z:\Drawings\KY155-Floyds Fork\KY155-617 Project 4\Structures\Silo Center 4-Hole Restroom\A3-201 - A3-202.dwg (A3-202)

GENERAL NOTES

1. ALL VERTICAL DIMENSIONS ARE TAKEN FROM THE BENCHMARK (100'-0") ELEVATION OF 658.00'.

GLULAM PRESERVATIVE TREATMENT

1. ALL GLULAM MEMBERS TO BE FINISHED WITH POLYURETHANE FINISH PER SPECIFICATIONS.
2. ALL COLUMNS, BEAMS, FLY RAFTERS AND DECKING TO BE PRESERVATIVE TREATED.

JAMES J. WALTERS REGISTERED KENTUCKY LANDSCAPE ARCHITECT

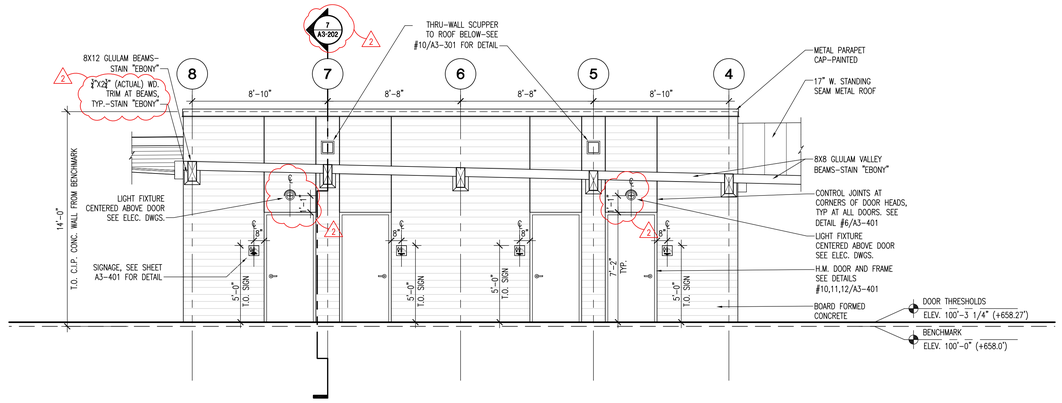

ELEVATION

SCALE: 1/4" = 1'–0"

6 A3-201

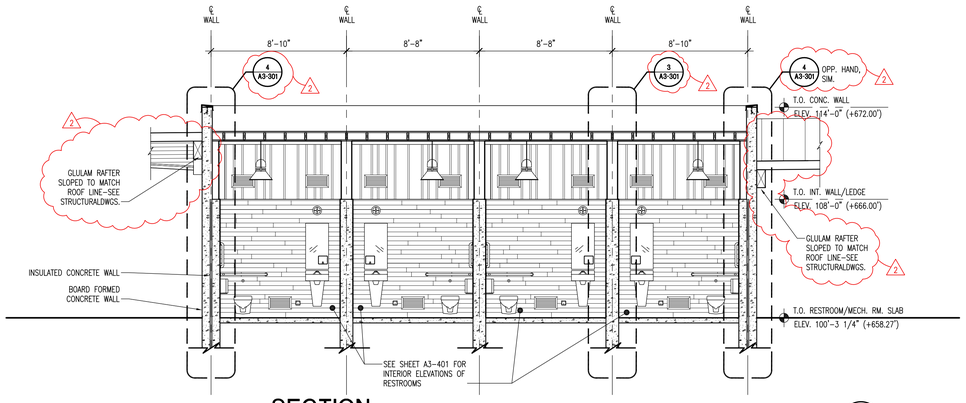

SECTION

SCALE: 1/4" = 1'–0"

3 A3-201

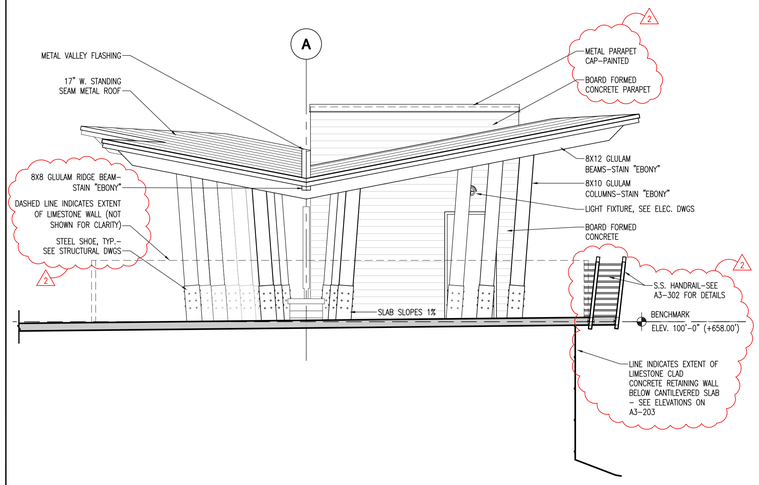

ELEVATION

SCALE: 1/4" = 1'–0"

5 A3-201

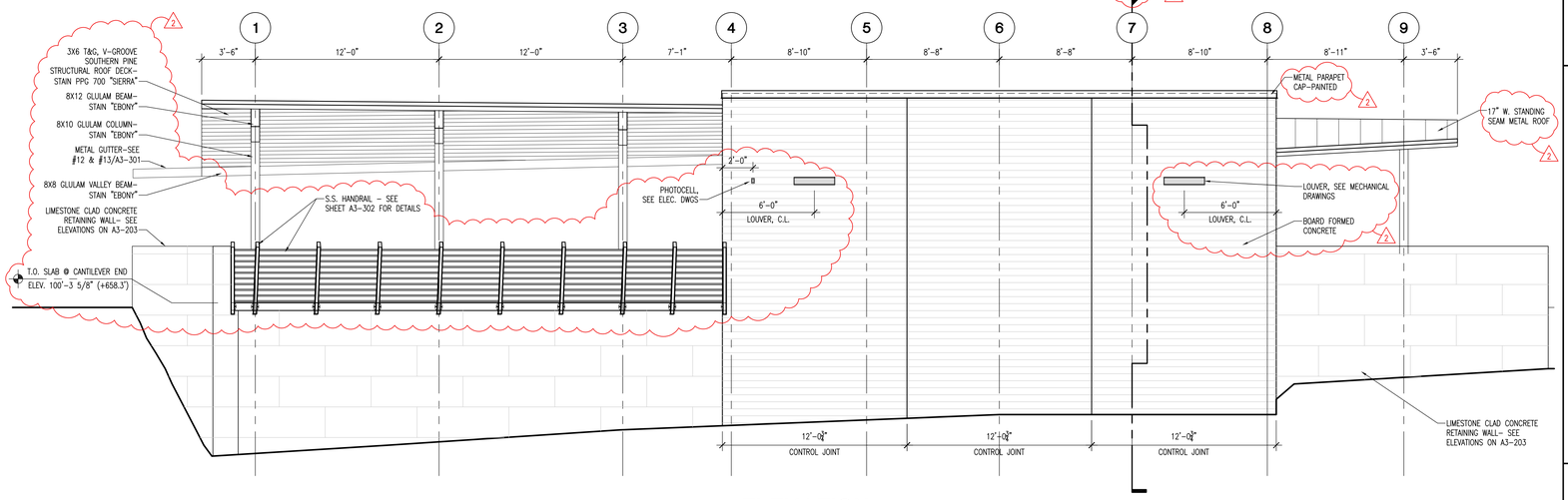

ELEVATION

SCALE: 1/4" = 1'–0"

2 A3-201

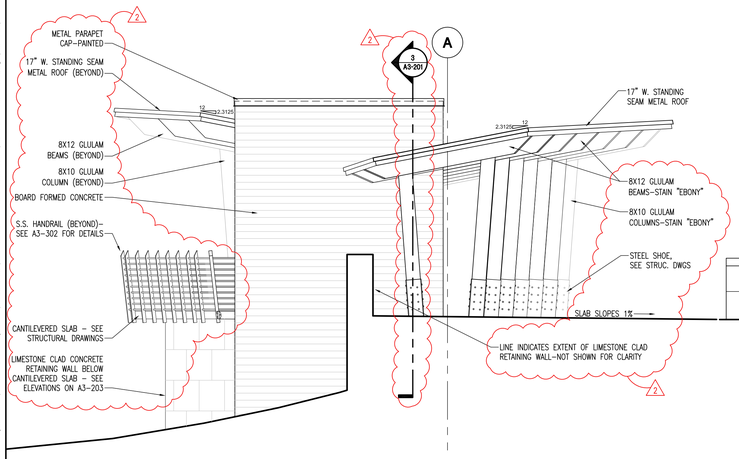

ELEVATION

SCALE: 1/4" = 1'–0"

4 A3-201

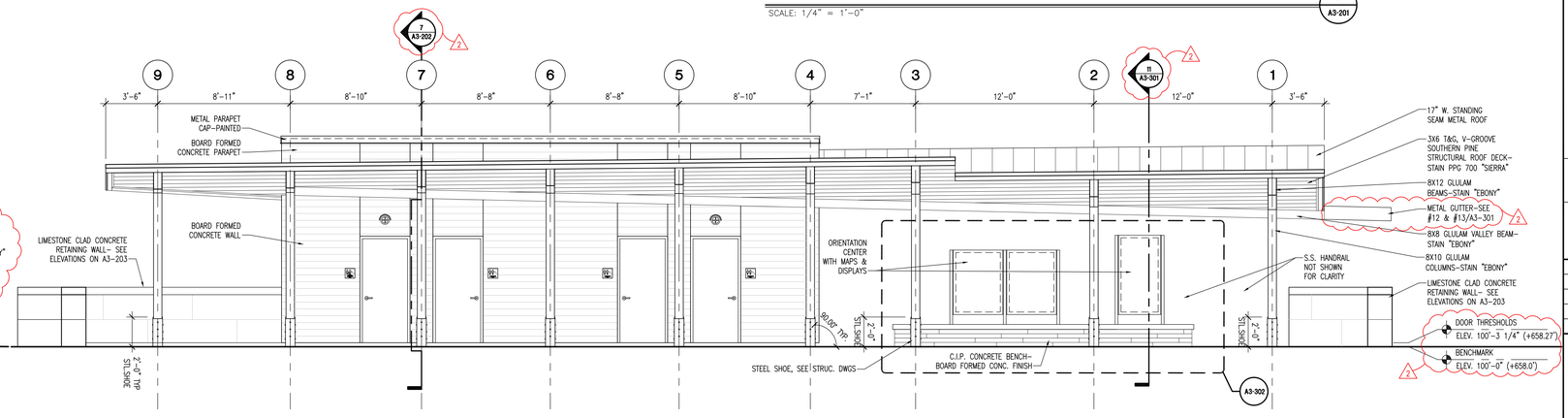

ELEVATION

SCALE: 1/4" = 1'–0"

1 A3-201

Architecture
Engineering
Planning

815 West Market Street, Suite 200, Louisville, Kentucky 40202
Phone: (502) 584-6300 Fax: (502) 584-6307 www.qkpartners.com
Kentucky · Indiana · Georgia · West Virginia · Tennessee · Florida

LANDSCAPE ARCHITECT
Wallace Roberts & Todd, LLC
1700 Market Street
28th Floor
Philadelphia, PA 19103
tel 215.732.5215
fax 215.732.2551

Architect
BRAVURA
111 West Washington Street
Louisville, Kentucky 40202
T: (502) 584-9900
F: (502) 584-0829

The Parklands of Floyds Fork, Project 4A

The Strand, Turkey Run Park and Broad Run Park
Louisville, Kentucky

Owner:
21st Century Parks, Inc.
371 W. Main St., Suite 202
Louisville, Kentucky 40202

REV #	DATE	DESCRIPTION
	05/09/2013	ISSUED FOR BID
1	05/30/2013	ADDENDUM #2: (1) ADDED ADDITIONAL NOTES AND DTL. TAGS (2) UPDATED S.S. HANDRAIL ON ELEVATION

Job No: 155-617
Date: May 30, 2013
Scale: As Shown
Drawn By:

ISSUED FOR ADDENDUM #2

Drawing Title:

Parklands of Floyds Fork

PROJECT 4A
Silo Center
4-Hole Trailhead
Elevations

Drawing No:

A3-201

May 31, 2013 - 12:45pm
Z:\Drawings\KY155-Floyds Fork\KY155-617 Project 4\Structures\Silo Center 4-Hole Restroom\A3-201 - A3-202.dwg (A3-201)

LIGHTNING PROTECTION SYSTEM GENERAL NOTES:

1. CONCEAL ALUM. CABLING WHEREVER POSSIBLE.IN LOCATIONS THAT REQUIRE EXPOSED CONDUIT-COORDINATE ROUTING, FOR APPROVAL, WITH ARCHITECT. ALL CABLING EXPOSED TO SITE SHALL BE CONCEALED IN PAINTED CONDUIT AND ROUTED PER APPROVAL OF ARCHITECT.
2. THE LIGHTNING PROTECTION INSTALLER SHALL BE RESPONSIBLE FOR VERIFYING SITE CONDITIONS AS REQUIRED FOR BONDING IN ACCORDANCE WITH THE NATIONAL STANDARDS NFPA 780 & UL 96A AS REQUIRED FOR SYSTEM CERTIFICATION.
3. SECONDARY SURGE ARRESTORS OR TVSS LISTED FOR LPS ARE REQUIRED ON THE MAIN ELECTRICAL SERVICE PANEL, DATA, TELEPHONE AND ANTENNA SERVICE PROTECTION ARE ALSO REQUIRED BY ELECTRICAL CONTRACTOR OR VARIOUS UTILITY AGENCIES.
4. TELEPHONE AND OR ELECTRICAL SERVICE ENTRANCE GROUNDS SHALL BE INTERCONNECTED TO ONE LIGHTNING PROTECTION GROUND OR WATER PIPE.
5. METAL BODIES OF INDUCTANCE LOCATED ABOUT THE ROOF SUCH AS: METAL FLASHING, ROOF DRAINS, SOIL PIPES, VENTS, ETC. LOCATED WITHIN 6' OF A LIGHTNING CONDUCTOR OR BONDED METAL BODY SHALL BE INTERCONNECTED TO THE LIGHTNING CONDUCTOR SYSTEM.
6. NO BEND OF A CONDUCTOR SHALL FORM A FINAL INCLUDED ANGLE OF LESS THAN 90° NOR SHALL HAVE A RADIUS OF OF BEND OF LESS THAN 8".
7. CONDUCTORS SHALL INTERCONNECT ALL AIR TERMINALS AND SHALL FORM A TWO-WAY PATH FROM EACH AIR TERMINAL HORIZONTALLY OR DOWNWARD TO CONNECTIONS WITH GROUND TERMINALS.
8. ALL LIGHTNING PROTECTION TERMINALS SHALL BE FASTENED NOT MORE THAN 3' MAXIMUM SPACING.
9. GROUND RODS SHALL BE DRIVEN TO A MINIMUM DEPTH OF 10' BELOW GRADE AND 2' AWAY FROM FOUNDATION WALLS.
10. CONNECTIONS TO GROUND LOOP CONDUCTOR SHALL BE MADE AT A POINT NOT LESS THAN 18" BELOW GRADE AND 2' AWAY FROM FOUNDATION WALL.
11. AIR TERMINALS SHALL BE PLACED AT ALL UNPROTECTED OUTSIDE CORNERS AND LOCATED INTERMEDIATELY ON 20' MAX. SPACING AROUND THE ROOF PERIMETER AND WITHIN 2' OF OUTSIDE EDGE.
12. BOND ALL METALLIC PIPES INCLUDING WATER, SEWER, STORM, ETC. WHICH ENTER THE STRUCTURE.
13. THE LIGHTNING PROTECTION SYSTEM SHALL BE INSTALLED IN A NEAT AND INCONSPICUOUS MANNER AND AS APPROVED BY ARCHITECT.
14. SEAL ENDS OF CONDUIT MOISTURE TIGHT WITH DUCT SEAL OR LEAD WEDGE.
15. THE LAYOUT FOR THESE SYSTEMS ARE SCHEMATIC AND INTENDED TO SHOW BASIC SYSTEM LAYOUT. CONTRACTOR SHALL PROVIDE SHOP DRAWINGS WITH FULL SYSTEM AND DETAILS FOR APPROVAL.

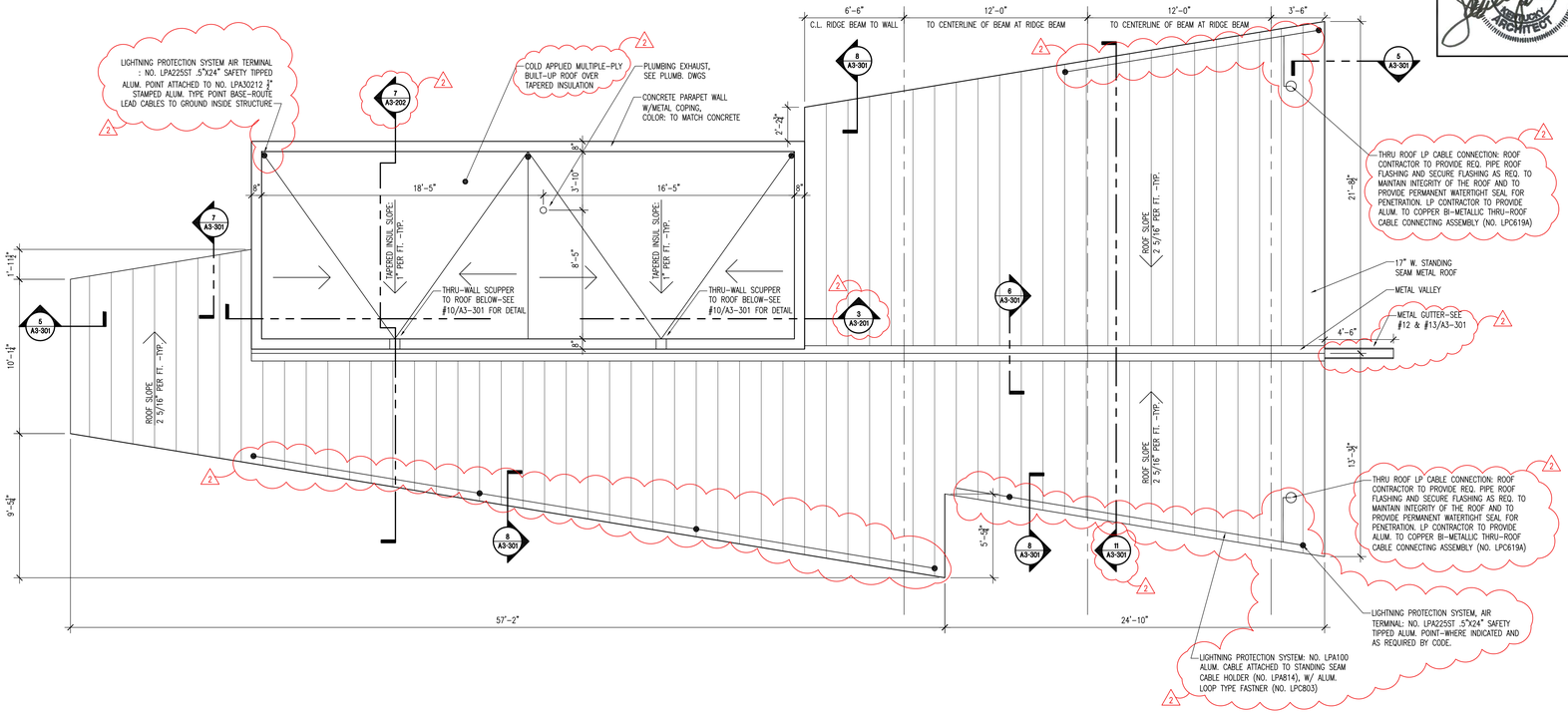

ROOF PLAN

SCALE: 1/4" = 1'-0"

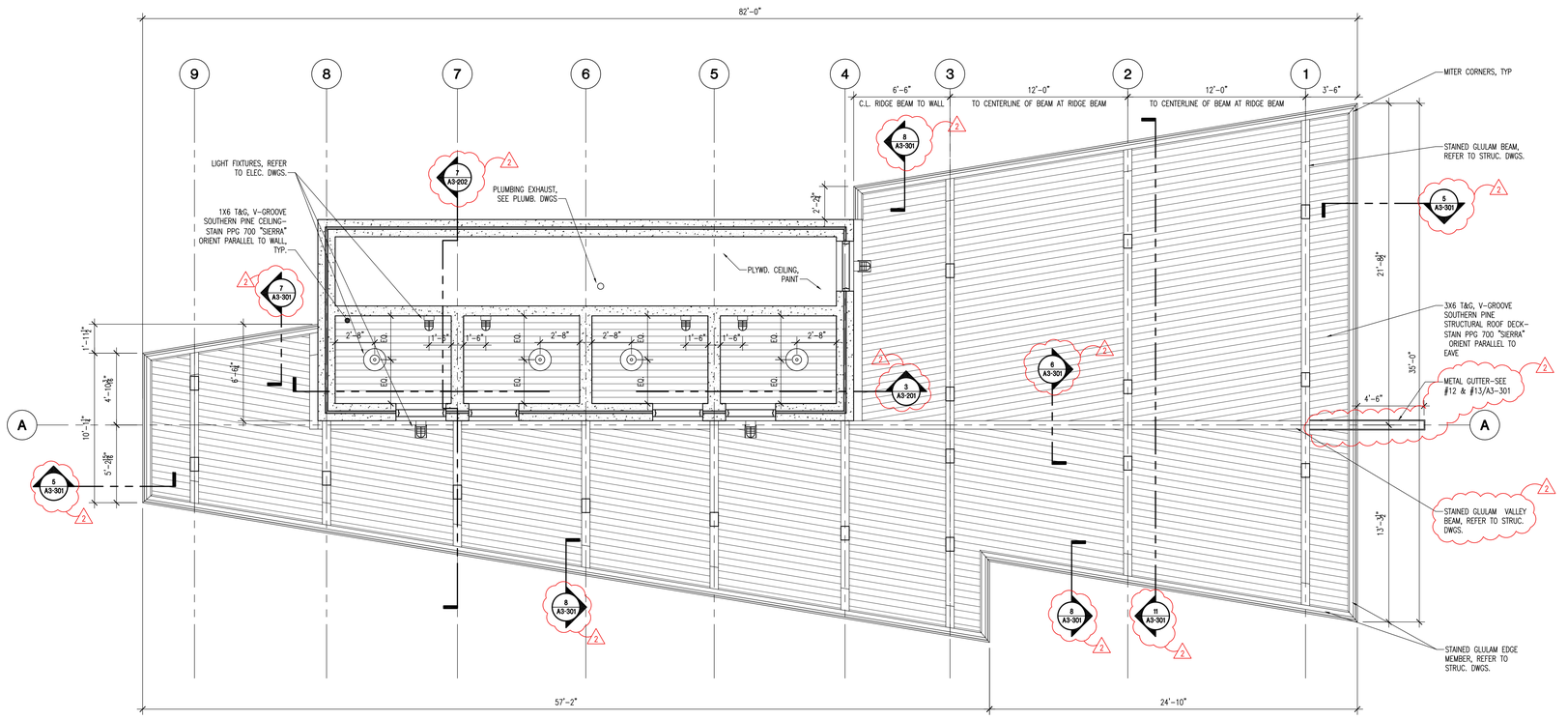

REFLECTED CEILING PLAN

SCALE: 1/4" = 1'-0"

Architecture
Engineering
Planning

815 West Market Street, Suite 300, Louisville, Kentucky 40202
Phone: (502) 584-0999 Fax: (502) 584-0555 www.qkarch.com
Kentucky · Indiana · Georgia · West Virginia · Tennessee · Florida

LANDSCAPE ARCHITECT
Wallace Roberts & Todd, LLC
1700 Market Street
28th Floor
Philadelphia, PA 19103
tel 215.732.5215
fax 215.732.2551

Architect
BRAVURA
111 West Washington Street
Louisville, Kentucky 40202
T: (502) 584-9900
F: (502) 584-0829

The Parklands of Floyds Fork, Project 4A

The Strand, Turkey Run Park and Broad Run Park
Louisville, Kentucky

Owner:
21st Century Parks, Inc.
371 W. Main St., Suite 202
Louisville, Kentucky 40202

REV/ #	DATE	DESCRIPTION
	05/08/2013	ISSUED FOR BID
1	05/30/2013	ADD. #2: (1) ADDED LIGHTNING PROTECTION TO ROOF PLAN (2) REVISED SECTION TAGS

Job No:	155-617
Date:	May 30, 2013
Scale:	As Shown
Drawn By:	

ISSUED FOR ADDENDUM #2

Drawing Title:

Parklands of Floyds Fork

PROJECT 4A
Silo Center
4-Hole Trailhead
Plans

Drawing No:

A3-102

May 21, 2013 - 2:20pm
Z:\Drawings\KY155-Floyds Fork\KY155-617 Project 4\Structures\Silo Center 4-Hole Restroom\A3-101-A3-102.dwg (A3-102)

GENERAL NOTES

1. DIMENSIONS THAT SET THE LOCATION OF GLULAM COLUMNS ARE TAKEN FROM THE BENCHMARK (100'-0") ELEVATION OF 658.00'.

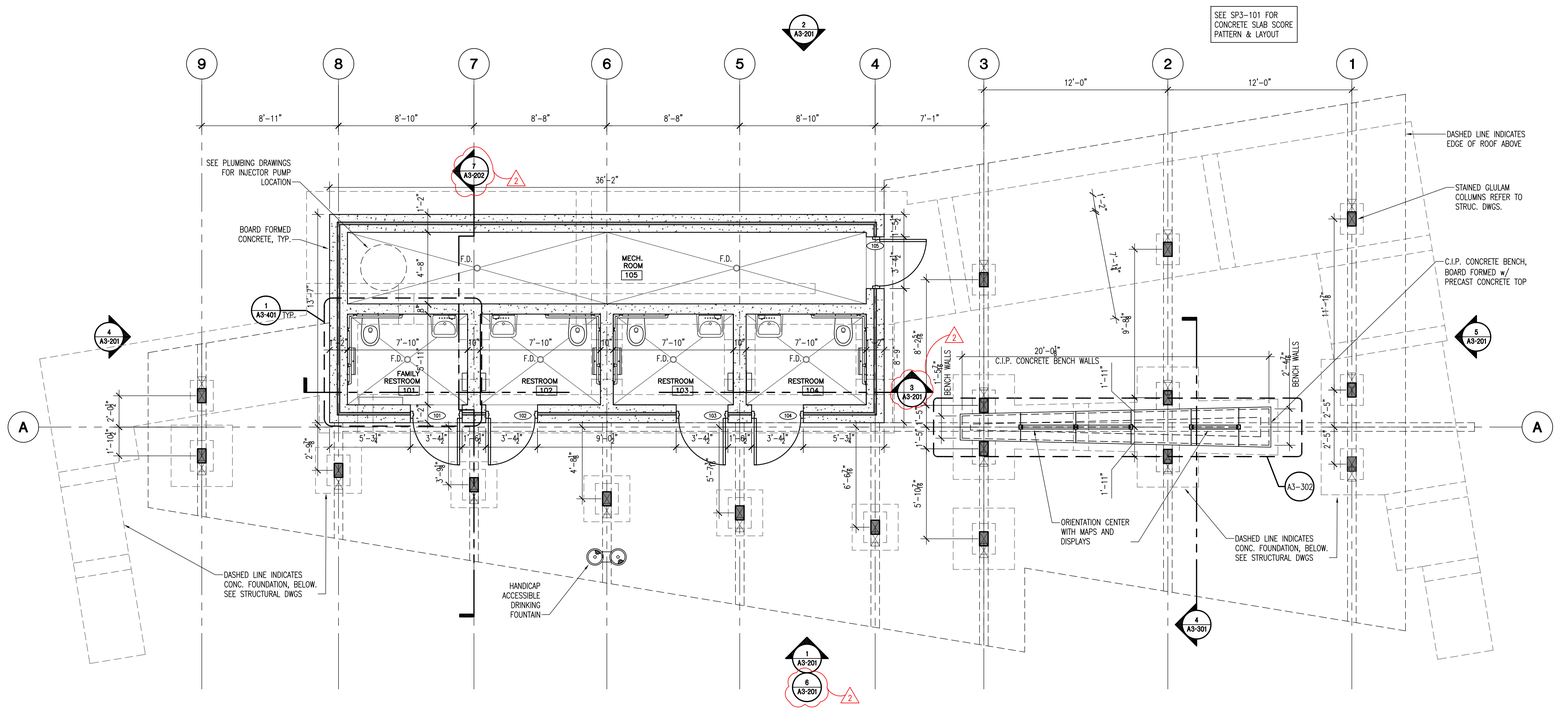

PLAN

SCALE: 1/4" = 1'-0"

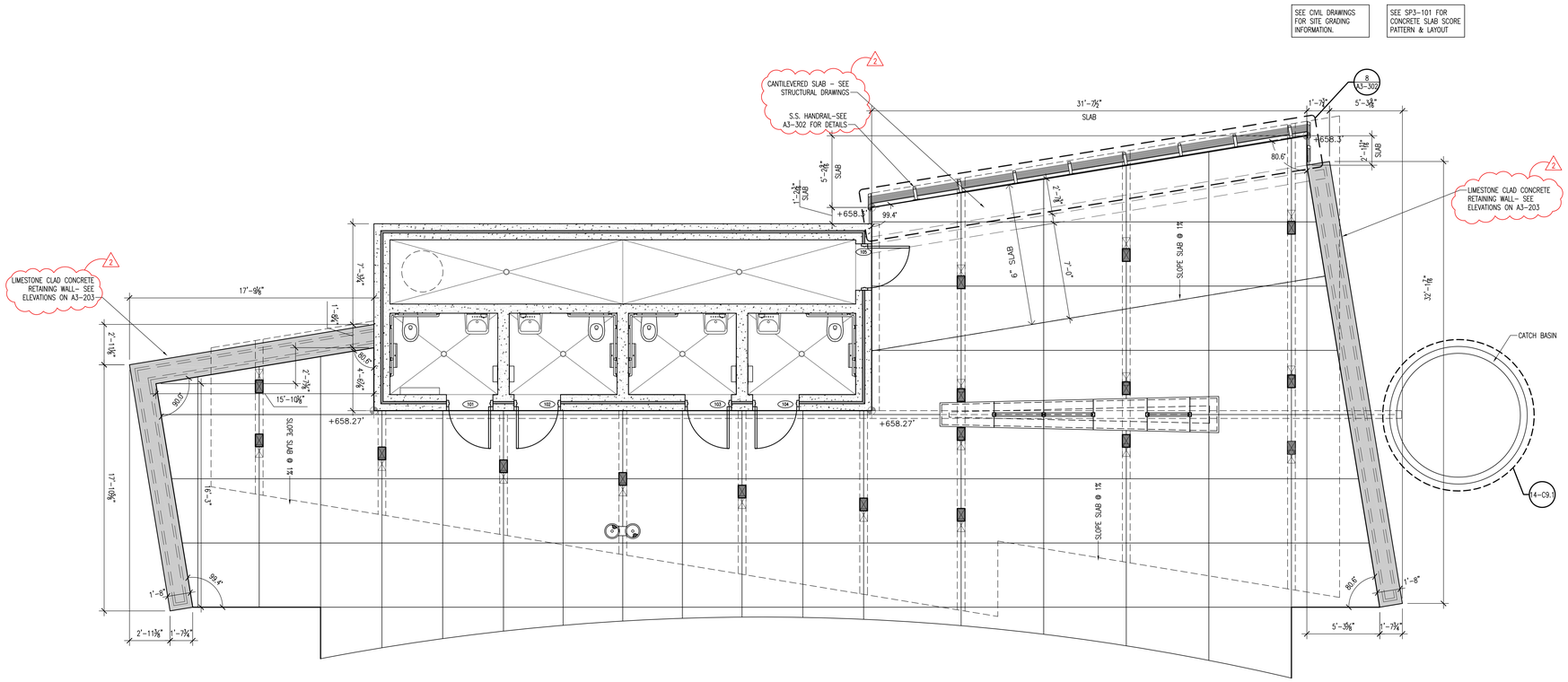

PLAN - REATAINING WALL AND SLAB

SCALE: 1/4" = 1'-0"

Architecture
Engineering
Planning

815 West Market Street, Suite 200, Louisville, Kentucky 40202
Phone: 502.584.6300 Fax: 502.584.6307 www.qkpartners.com
Kentucky · Indiana · Georgia · West Virginia · Tennessee · Florida

LANDSCAPE ARCHITECT
Wallace Roberts & Todd, LLC
1700 Market Street
28th Floor
Philadelphia, PA 19103
tel 215.732.5215
fax 215.732.2551

Architect
BRAVURA
111 West Washington Street
Louisville, Kentucky 40202
T: (502) 584-9900
F: (502) 584-0829

The Parklands of Floyds Fork, Project 4A

The Strand, Turkey Run Park and Broad Run Park
Louisville, Kentucky

Owner:
21st Century Parks, Inc.
371 W. Main St., Suite 202
Louisville, Kentucky 40202

REV #	DATE	DESCRIPTION
	05/08/2013	ISSUED FOR BID
1	05/30/2013	ADDENDUM #2: (1) REVISED PLAN NOTES. (2) REVISED SECTION TAGS

Job No:	155-617
Date:	May 30, 2013
Scale:	As Shown
Drawn By:	

ISSUED FOR ADDENDUM #2

Drawing Title:

Parklands of Floyds Fork

PROJECT 4A
Silo Center
4-Hole Trailhead
Plans

Drawing No:

A3-101

May 30, 2013 - 4:11pm
Z:\Drawing\KY155-Floyds Fork\KY155-617 Project 4\Structures\Silo Center 4-Hole Restroom\A3-101-A3-102.dwg (A3-101)

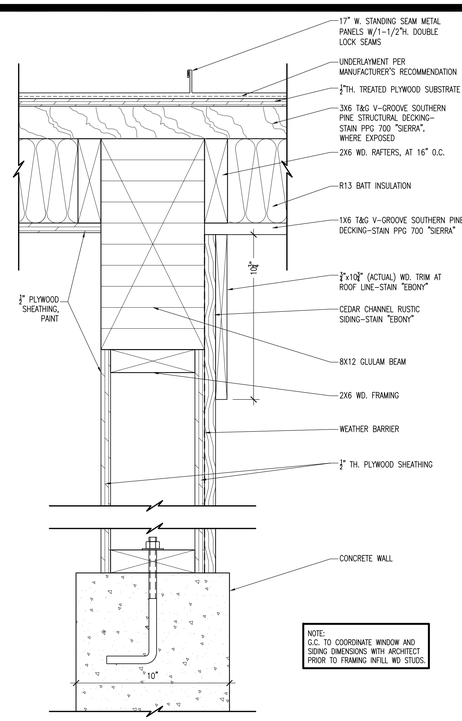

SECTION DETAIL
SCALE: 3" = 1'-0"
9 A1-301

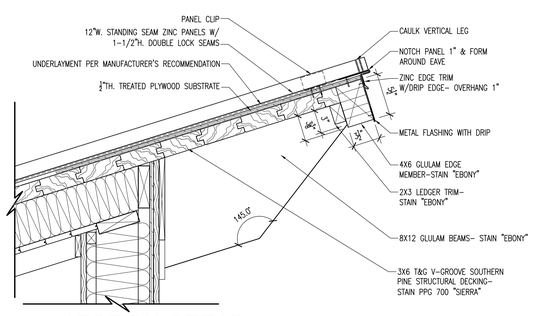

SECTION DETAIL
SCALE: 1 1/2" = 1'-0"
11 A1-301

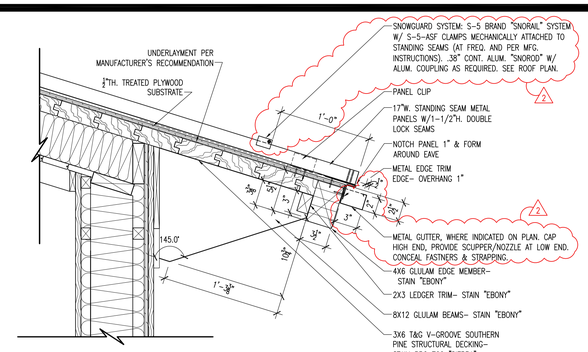

SECTION DETAIL
SCALE: 1 1/2" = 1'-0"
10 A1-301

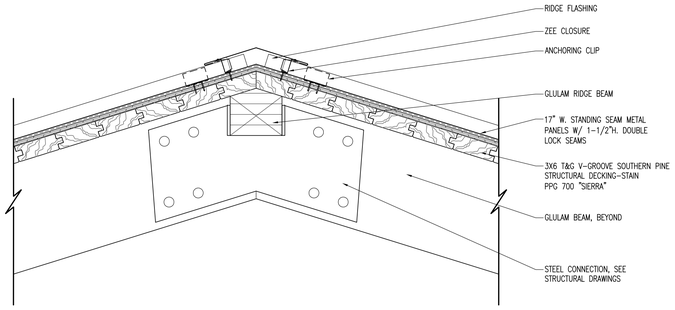

SECTION DETAIL
SCALE: 1 1/2" = 1'-0"
7 A1-301

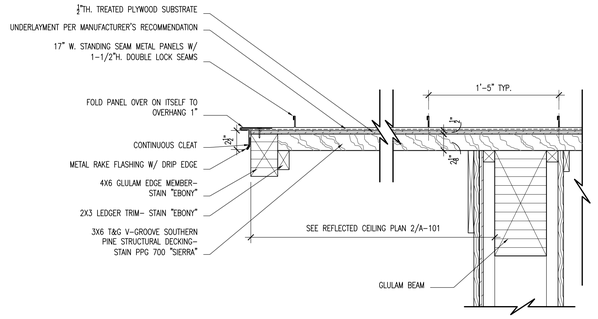

SECTION DETAIL
SCALE: 1 1/2" = 1'-0"
6 A1-301

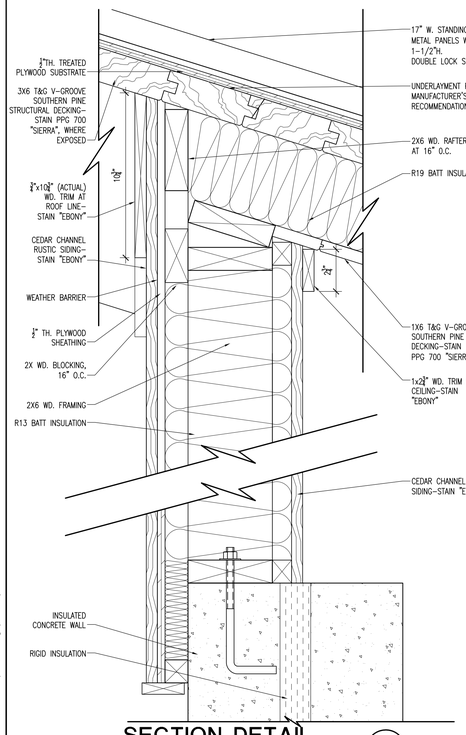

SECTION DETAIL
SCALE: 3" = 1'-0"
8 A1-301

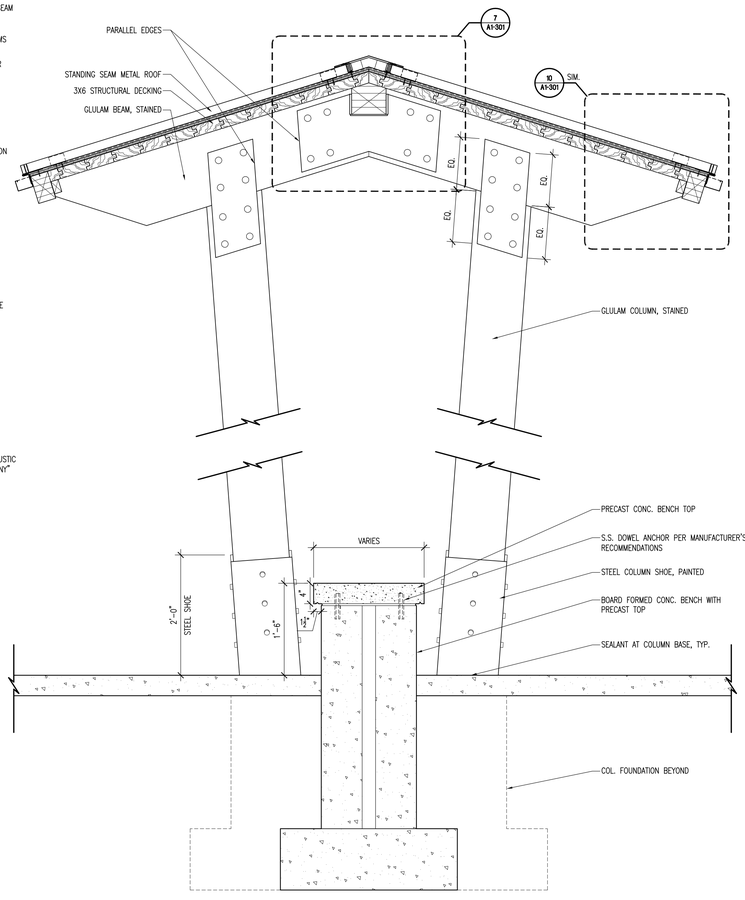

COLUMN SECTION
SCALE: 1" = 1'-0"
4 A1-301

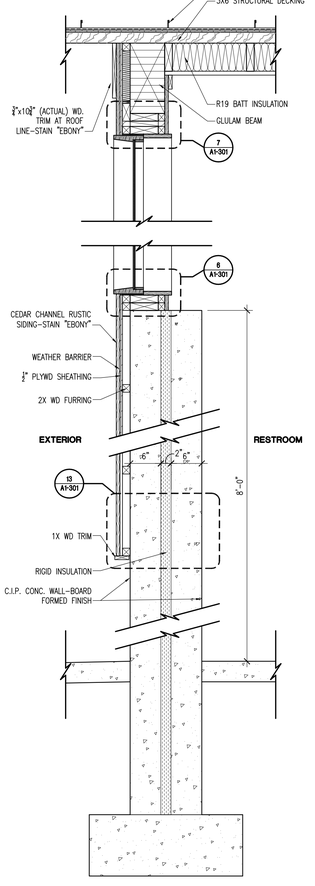

WALL SECTION
SCALE: 1" = 1'-0"
3 A1-301

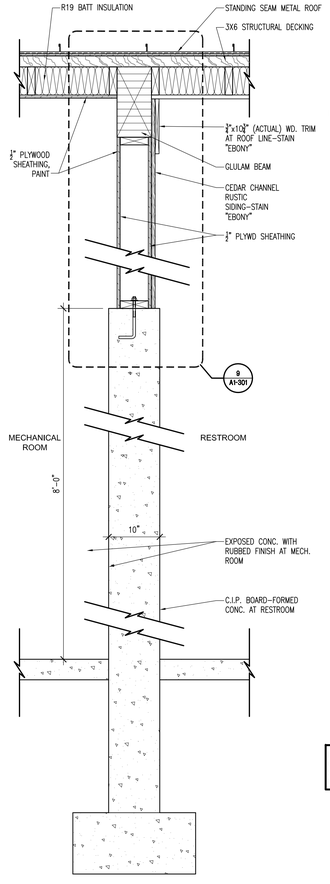

WALL SECTION
SCALE: 1" = 1'-0"
2 A1-301

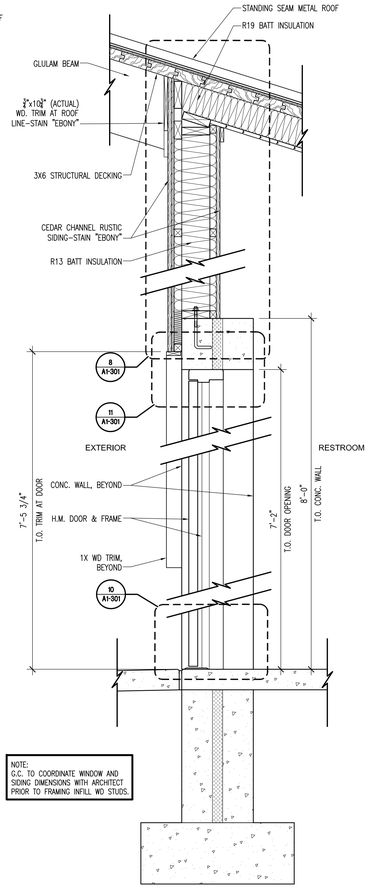

WALL SECTION
SCALE: 1" = 1'-0"
1 A1-301

GLULAM PRESERVATIVE TREATMENT

1. ALL GLULAM MEMBERS TO BE FINISHED WITH POLYURETHANE FINISH PER SPECIFICATIONS.
2. ALL COLUMNS, BEAMS, FLY RAFTERS AND DECKING TO BE PRESERVATIVE TREATED.

JAMES J. WALTZ
REGISTERED
No. 9412
SCOTT WALTZ
KENTUCKY
ARCHITECT

Architecture
Engineering
Planning

815 West Market Street, Suite 300, Louisville, Kentucky 40202
Phone: 502-585-2222 Facsimile: 502-992-0905 Internet: www.qk4.com
Kentucky · Indiana · Georgia · West Virginia · Tennessee · Florida

LANDSCAPE ARCHITECT
WRT

Wallace Roberts & Todd, LLC
1700 Market Street
28th Floor
Philadelphia, PA 19103
tel 215.732.5215
fax 215.732.2551

Architect
BRAVURA
111 West Washington Street
Louisville, Kentucky 40202
T: (502) 584-0050
F: (502) 584-0829

The Parklands of Floyds Fork, Project 4A

The Strand, Turkey Run Park and Broad Run Park
Louisville, Kentucky

Owner:
21st Century Parks, Inc.
371 W. Main St., Suite 202
Louisville, Kentucky 40202

REV #	DATE	DESCRIPTION
	05/08/2013	ISSUED FOR BID
1	05/23/2013	ADDENDUM #1: REVISED TITLE TO READ "ADD-ALT. NO.2"
2	05/30/2013	ADDENDUM #2: (1) ADDED SNOW GUARD TO ROOF DTL. #10 (2) ADDED METAL GUTTER TO ROOF DTL. #10

Job No: 155-617
Date: May 30, 2013
Scale: As Shown
Drawn By:
ISSUED FOR ADDENDUM #2

Drawing Title:
Parklands of Floyds Fork
ADD-ALT. NO.2
PROJECT 4A
The Strand
2-Hole Trailhead
Wall Sections & Dtls.

Drawing No:
A1-301

May 29, 2013 - 3:48pm
Z:\Drawings\XYT55-Floyds Fork\XYT55-617 Project 4\Structure\2-Hole Restrooms\A1-301.dwg (A1-301)

GLULAM PRESERVATIVE TREATMENT

1. ALL GLULAM MEMBERS TO BE FINISHED WITH POLYURETHANE FINISH PER SPECIFICATIONS.
2. ALL COLUMNS, BEAMS, FLY RAFTERS AND DECKING TO BE PRESERVATIVE TREATED.

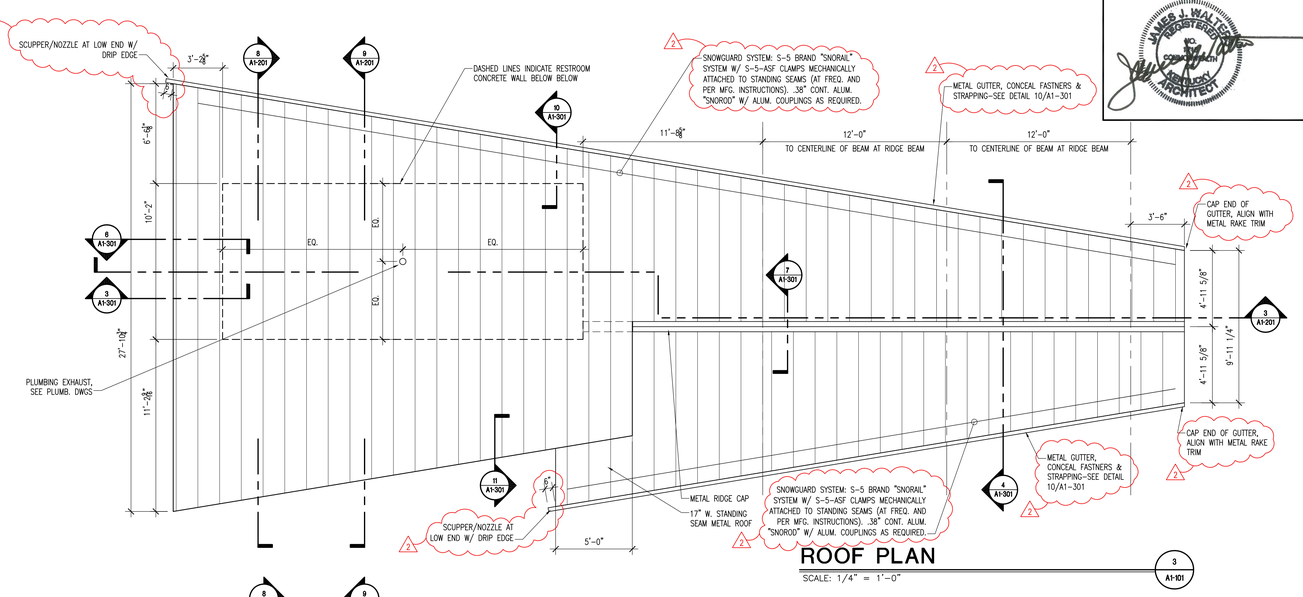

ROOF PLAN

SCALE: 1/4" = 1'-0"

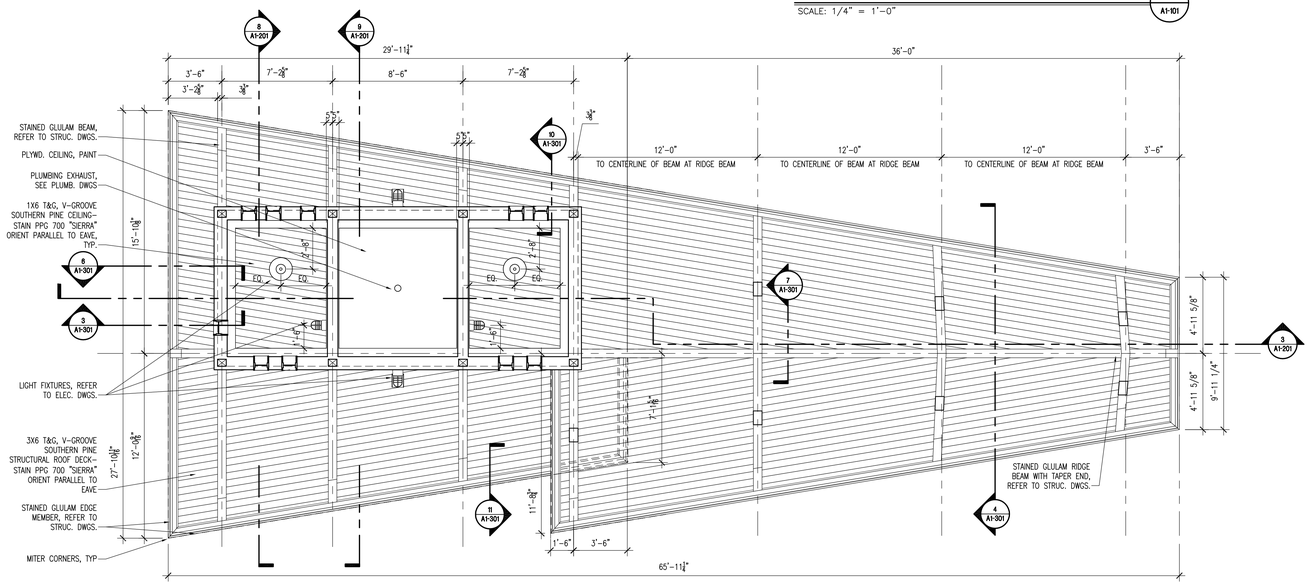

REFLECTED CEILING PLAN

SCALE: 1/4" = 1'-0"

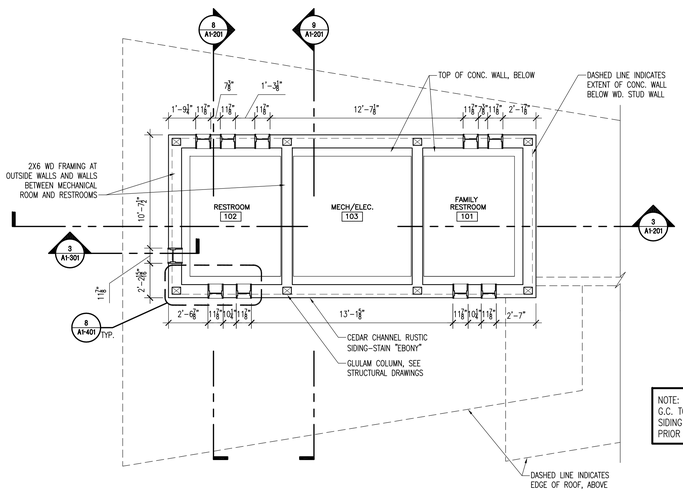

NOTE:
G.C. TO COORDINATE WINDOW AND SIDING DIMENSIONS WITH ARCHITECT PRIOR TO FRAMING INFILL WD STUDS.

PLAN ABOVE CONC. WALLS

SCALE: 1/4" = 1'-0"

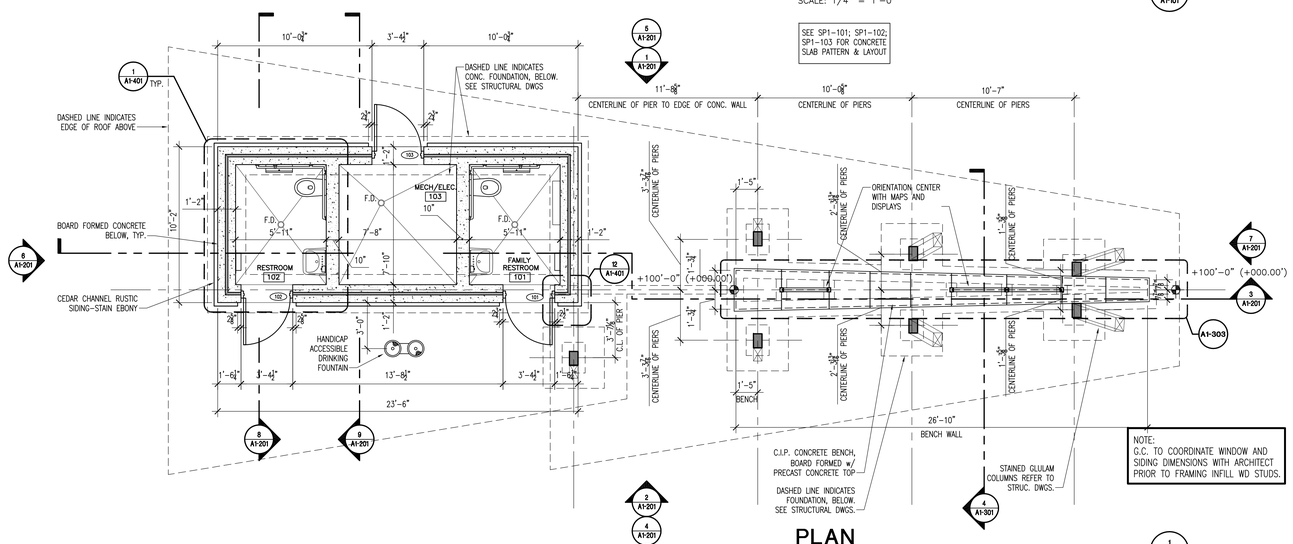

NOTE:
G.C. TO COORDINATE WINDOW AND SIDING DIMENSIONS WITH ARCHITECT PRIOR TO FRAMING INFILL WD STUDS.

PLAN

SCALE: 1/4" = 1'-0"

JAMES J. WALTON REGISTERED NO. 9327 LANDSCAPE ARCHITECT

Architecture
Engineering
Planning

815 West Market Street, Suite 300, Louisville, Kentucky 40202
Phone: 502-585-2222 Facsimile: 502-992-0905 Internet: www.qk4.com
Kentucky · Indiana · Georgia · West Virginia · Tennessee · Florida

LANDSCAPE ARCHITECT
WRT

Wallace Roberts & Todd, LLC
1700 Market Street
28th Floor
Philadelphia, PA 19103
tel 215.732.5215
fax 215.732.2551

Architect
BRAVURA
111 West Washington Street
Louisville, Kentucky 40202
T: (502) 584-6600
F: (502) 584-0829

The Parklands of Floyds Fork, Project 4A

The Strand, Turkey Run Park and Broad Run Park
Louisville, Kentucky

Owner:
21st Century Parks, Inc.
371 W. Main St., Suite 202
Louisville, Kentucky 40202

REV #	DATE	DESCRIPTION
	05/08/2013	ISSUED FOR BID
1	05/23/2013	ADDENDUM #1: REVISED TITLE TO READ: "ADD-ALT. NO.2"
2	05/30/2013	ADDENDUM #2: (1) ADDED SNOW GUARD TO ROOF PLAN (2) ADDED METAL GUTTER TO ROOF PLAN

Job No:	155-617
Date:	May 30, 2013
Scale:	As Shown
Drawn By:	

ISSUED FOR ADDENDUM #2

Drawing Title:

Parklands of Floyds Fork
ADD-ALT. NO.2
PROJECT 4A
The Strand
2-Hole Trailhead
Plans

Drawing No:

A1-101

May 29, 2013 - 3:38pm
Z:\Drawings\KY155-Floyds Fork\KY155-617 Project 4\Structure\2-Hole Restrooms\A1-101.dwg (A1-101)

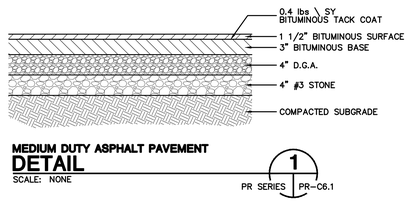

MEDIUM DUTY ASPHALT PAVEMENT
DETAIL 1
SCALE: NONE — PR SERIES | PR–C6.1

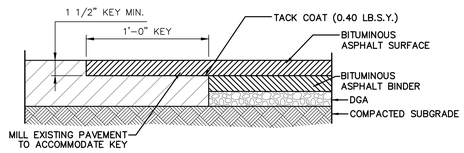

EDGE KEY
DETAIL 2
SCALE: NONE — PR SERIES | PR–C6.1

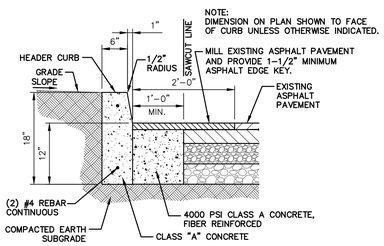

HEADER CURB WITH 12" WIDE "PATCH BACK"
DETAIL 3
SCALE: NONE — PR SERIES | PR–C6.1

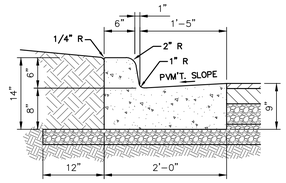

NOTE: TRANSION CURB TO MEDIAN CURB IN 2 L.F.
CLASS "A" CONCRETE WITH POLYPROPYLENE FIBERS

TYPE A (24" CONCRETE CURB)
DETAIL 4
SCALE: NONE — PR SERIES | PR–C6.1

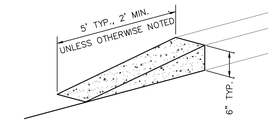

CONCRETE CURB TAPER
DETAIL 5
SCALE: NONE — PR SERIES | PR–C6.1

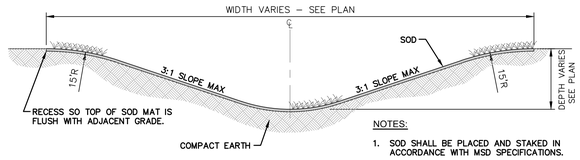

NOTES:
1. SOD SHALL BE PLACED AND STAKED IN ACCORDANCE WITH MSD SPECIFICATIONS.

CONTOURED-BOTTOM SOD DITCH
DETAIL 6
SCALE: NONE — PR SERIES | PR–C6.1

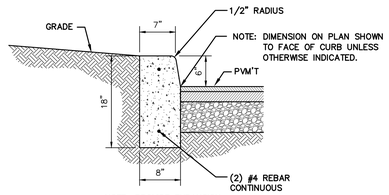

NOTE: PROVIDE EXPANSION JOINT AT 20' O.C.

HEADER CURB
DETAIL 7
SCALE: NONE — PR SERIES | PR–C6.1

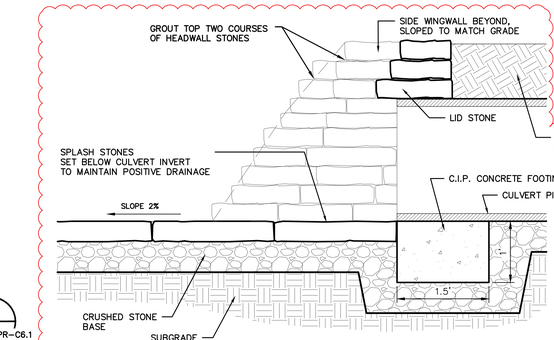

SECTION A-A

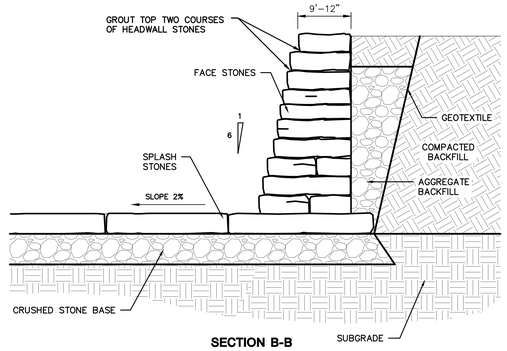

SECTION B-B

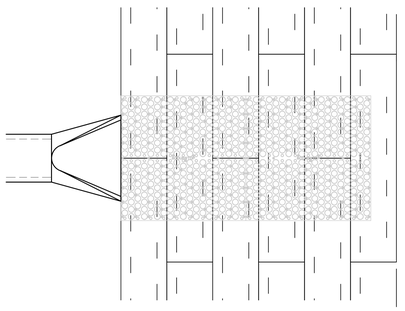

STAPLE SOD EVERY 10 INCHES WITHIN 4 INCHES OF LEADING EDGE AND RANDOMLY THROUGHOUT

STAPLED SOD DETAILS

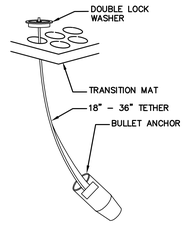

ADD EXTRA ANCHORS IF NECESSARY TO ENSURE CONSISTENT CONTACT WITH SOIL, OR IMPROVE SOIL SURFACE SMOOTHNESS.

COHESIVE SOILS SCOURSTOP TRANSITION MAT INSTALLATION DETAILS

TRM/SOD COMBINATION INSTALLATION DETAILS

TURF REINFORCEMENT MAT INSTALLED OVER SOD:
– TRIM INSTALLED SOD TO 1" HEIGHT. INSTALL TRM OVER INSTALLED SOD. STRETCH TRM TIGHTLY ACROSS INSTALLATION SURFACE AREA. INSTALL STAPLES AT MAX. OF 18" APART (450 MM). IRRIGATE SOD AS NEEDED AFTER INSTALLATION TO AID IN ESTABLISHMENT OF VEGETATION.
– SOD DOWNSTREAM OF MAT INSTALLATION AREA DOES NOT NEED TRIMMED BEFORE MAT INSTALLATION.
– TO HOLD SOD IN PLACE DOWNSTREAM OF TM'S, INSTALL WIRE STAPLES AT 8" O.C. WITHIN 4" OF UPSTREAM EDGE OF SOD, AND AT A RATE OF ONE STAPLE PER SQUARE FOOT STAGGERED THROUGHOUT.

==> FOR DESIGN INFORMATION, REFER TO "DESIGN METHODOLOGY" DOCUMENT AVAILABLE AT **www.scourstop.com.**

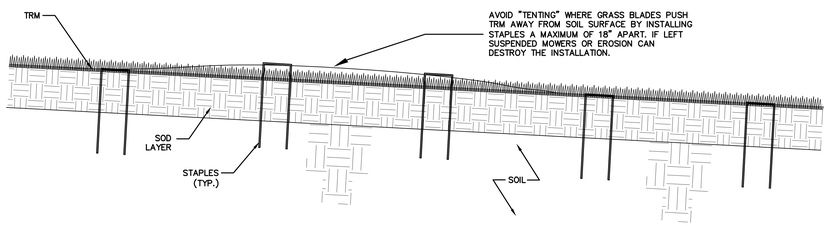

SCOURSTOP OUTLET STABILIZATION
DETAIL 8
SCALE: NONE — PR SERIES | PR–C6.1

PLAN VIEW

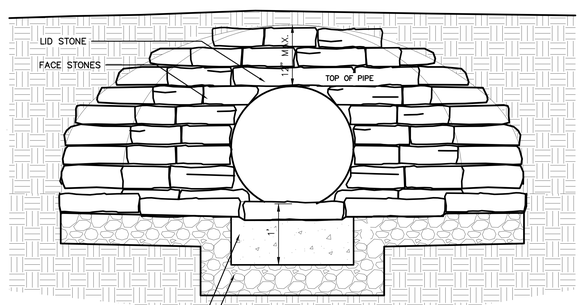

FRONT ELEVATION

DRY LAID STONE HEADWALL
DETAIL 9
SCALE: NONE — PR SERIES | PR–C6.1

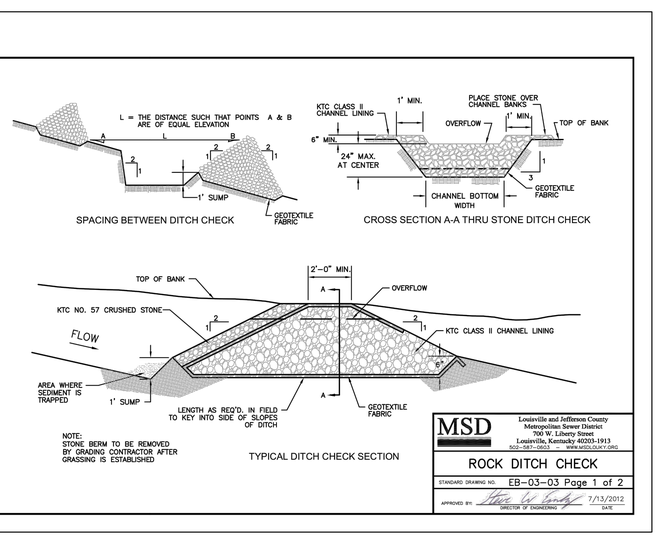

MSD — Louisville and Jefferson County Metropolitan Sewer District
700 W. Liberty Street
Louisville, Kentucky 40203-1913
502–587–0603 — www.MSD.LOUY.ORG

ROCK DITCH CHECK
STANDARD DRAWING NO. EB–03–03 Page 1 of 2
APPROVED BY: Steve W Lundy, DIRECTOR OF ENGINEERING — 7/13/2012 DATE

ROCK DITCH CHECK

When and Where to Use It

A rock ditch check should be installed in steeply sloped swales, or in swales where adequate vegetation cannot be established. Rock ditch checks should be used only in small open channels. Rock ditch checks should not be placed in waters of the commonwealth (unless approved by state authorities).

Installation:

A geotextile fabric shall be installed over the soil surface where the rock ditch check is to be placed and laid under the KTC #57 crushed stone extending to the downstream slope of the rock check.

The body of the rock ditch check shall be composed of KTC Class II channel lining.

The upstream face of the rock ditch check shall be composed of KTC #57 crushed stone.

Rock ditch checks should not exceed a height of 2–feet at the centerline of the channel.

Rock ditch checks should have a minimum top flow length of 2–feet.

Stone should be placed over the channel banks prevent water from cutting around the ditch check.

The rock must be placed by hand or mechanical placement (no dumping of rock to form dam) to achieve complete coverage of the ditch or swale and to ensure that the center of the check is lower than the edges.

The maximum spacing between the dams should be such that the toe of the upstream check is at the same elevation as the top of the downstream check.

Inspection and Maintenance:

Inspect rock ditch checks every seven (7) calendar days and within 24–hours after each rainfall event that produces ½–inches or more of precipitation. Inspect for sediment and debris accumulation. Inspect ditch check edges for erosion and repair promptly as required.

Sediment should be removed when it reaches 1/3 the original check height.

In the case of grass–lined ditches and swales, rock ditch checks should be removed when the grass has matured sufficiently to protect the ditch or swale unless the slope of the swale is greater than 4%.

After construction is complete, all stone should be removed if vegetation will be used for permanent erosion control measures.

The area beneath the rock ditch checks should be seeded and mulched immediately after rock check dam removal.

MSD — Louisville and Jefferson County Metropolitan Sewer District
700 W. Liberty Street
Louisville, Kentucky 40203-1913
502–587–0603 — www.MSD.LOUY.ORG

ROCK DITCH CHECK
STANDARD DRAWING NO. EB–03–03 Page 2 of 2
APPROVED BY: Steve W Lundy, DIRECTOR OF ENGINEERING — 7/13/2012 DATE

Seals
STATE OF KENTUCKY — ROBERT D. MARTIN — 15958 — LICENSED PROFESSIONAL ENGINEER
Robert D. Martin 5/8/13

Engineering
Planning
1046 East Chestnut Street, Louisville, Kentucky 40204
502.584.6300 • 800.264.6300 • www.qkpower.com
Kentucky • Indiana • Georgia • Tennessee • Florida

LANDSCAPE ARCHITECT
Wallace Roberts & Todd, LLC
1700 Market Street
28th Floor
Philadelphia, PA 19103
tel 215.732.5215
fax 215.732.2551

Architect
BRAVURA
111 West Washington Street
Louisville, Kentucky 40202
T: (502) 584-9900
F: (502) 584-0829

The Parklands of Floyds Fork, Project 4A
The Strand, Turkey Run Park and Broad Run
Louisville, Kentucky

Owner:
21st Century Parks, Inc.
371 W. Main St. Suite 202
Louisville, Kentucky 40202

REV #	DATE	DESCRIPTION
2	05-30-2013	Addendum#2: Add Notes/Min. Splash Stone Dim., Add Rock Check

Job No: 12300.4AC
Date: May 8, 2013
Scale:
Drawn By:
BID SET

Drawing Title:
Parklands of Floyds Fork
PROJECT 4A Park Road Details

Drawing No:
PR-C6.1

May 30, 2013 – 10:45am
C:\Users\User.PW-NT\appdata\local\temp\AcPublish_4892\12300.4AC_DTL_PR.dwg (PR–C6.1)

SUPPLEMENTAL BRIDGE SPECIFIC CONSTRUCTION NOTES AND PHASING:

1. *IMPORTANT* SEE GENERAL SWPPP NOTES, SHEET G0.13 FOR INFORMATION REGARDING PHASING OF DISTURBANCE FOR LINEAR CONSTRUCTION (ROADS AND TRAILS). BMP'S LISTED BELOW ARE REQUIRED REGARDLESS OF THE CONTRACTOR'S PHASING STRATEGY.
2. CLEAR AREA SURROUNDING BRIDGE ABUTMENTS / PIERS.
3. INSTALL REINFORCED SILT FENCE WHERE SHOWN AND PER MSD STANDARD DETAIL EF-10-02.
4. INSTALL TEMPORARY PORTABLE COFFER DAM (DAM-IT-DAMS, AQUA BARRIER, OR EQUAL) IN CREEK TO SUPPORT THE CONSTRUCTION OF BRIDGES WHERE SHOWN. DAM TO BE SIZED AND LEASED TO THE CONTRACTOR BY MANUFACTURER. COFFER DAMS MAY NOT BE NECESSARY FOR CONSTRUCTION DEPENDING ON WATER LEVEL AT TIME OF CONSTRUCTION. IF THEY ARE DEEMED NOT NECESSARY, ALTERNATIVE MEANS OF PROTECTING THE CREEK MUST BE APPROVED BY MSD. COFFER DAM AREA TO BE DEWATERED BY PUMPING THROUGH A FILTER BAG TO A VEGETATED AREA AT LEAST 100' FROM THE STREAM.
5. PERFORM ROUGH GRADING OPERATIONS AT ABUTMENTS WHILE KEEPING THE DISTURBED LIMITS TO AN ABSOLUTE MINIMUM.
6. IF ROUGH GRADED AREA AROUND ABUTMENTS / PIERS REMAIN IN A STATE WHERE THE PERMANENT BIOENGINEERING STABILIZATION MEASURES CANNOT BE INSTALLED WITHIN 14 DAYS OF CONSTRUCTION ACTIVITIES, THEN THE CONTRACTOR MUST TEMPORARILY SEED AND STRAW DISTURBED AREAS. HOWEVER THE CONTRACTOR SHALL BE REQUIRED TO INSTALL THE PERMANENT BIOENGINEERING STABILIZATION MEASURES AS SOON AS IT IS PRACTICE TO DO SO.
6. CONSTRUCT ABUTMENTS / PIERS / ERECT BRIDGE
7. FINAL GRADE DISTURBED AREAS
8. INSTALL PERMANENT BIOENGINEERING STABILIZATION MEASURES AS DETAILED IN BR SERIES SHEETS.
9. DO NOT DISTURB ARCHEOLOGICAL OR GLADECRESS AREAS.
10. INSPECT BMP'S WEEKLY AND AFTER EVERY RAINFALL EVENT OF 0.5" OR GREATER.
11. REMOVE ALL BMP'S ONCE ALL CONSTRUCTION IS COMPLETED, DITCHES ARE RETURNED TO PLAN GRADES AND AREA IS STABILIZED PER MSD STANDARDS.

Park Road
Sta. 463+82.06 Back =
Sta. 500+00.00 Ahead

Bridge F411
See "BR" Series Sheets

LASATER ROAD

SWPPP CONSTRUCTION NOTES AND PHASING:

1. *IMPORTANT* SEE GENERAL SWPPP NOTES, SHEET G0.13 FOR INFORMATION REGARDING PHASING OF DISTURBANCE FOR LINEAR CONSTRUCTION (ROADS AND TRAILS). BMP'S LISTED BELOW ARE REQUIRED REGARDLESS OF THE CONTRACTOR'S PHASING STRATEGY.
2. **IMPORTANT** SEE TEMPORARY STREAM CROSSING NOTES, SHEET G0.13.
3. REFER TO MAINTENANCE OF TRAFFIC PLANS FOR CONSTRUCTION ACCESS INFORMATION. EACH ACCESS INTO THE CONSTRUCTION AREA MUST HAVE A TEMPORARY GRAVEL CONSTRUCTION ENTRANCE/EXIT INSTALLED PER MSD STANDARD DETAIL ER-01-02 ADJACENT TO PUBLIC ROADWAYS.
4. INSTALL REINFORCED SILT FENCE WHERE SHOWN AND PER MSD STANDARD DETAIL EF-10-02.
5. INSTALL PIPE END PROTECTION AT EACH END OF NEWLY CONSTRUCTED CULVERTS WHERE SHOWN AND PER DETAIL 1, G0.13.
6. INSTALL SCOUR STOP PADS AT PIPE OUTLETS ANCHORED PER MANUFACTURER'S RECOMMENDATIONS. PADDED AREA MUST BE A MINIMUM OF TWICE THE WIDTH OF THE PIPE AND 8 L.F. LONG. WHEN PIPE OUTLETS INTO A PERPENDICULAR DITCH THE PAD MUST EXTEND UP THE OPPOSITE SIDE BANK BY 4 L.F. PADS TO BE INSTALLED ON TOP OF SOD OR STRAW MAT, NOT ON BARE DIRT OR BLOWN STRAW. PADS ARE NOT NECESSARY ON ROCK FLOWLINES.
7. INSTALL STONE BAG INLET PROTECTION AT INLET HEADWALLS AND CATCH BASINS AS SHOWN AND PER MSD STANDARD DRAWINGS, EF-03-02, EF-05-02 AND EF-06-02. STONE BAGS ARE NOT PERMITTED TO BE PLACED WHERE PIPES ARE CONSTRUCTED IN EXISTING DRAWS.
8. INSTALL TEMPORARY PORTABLE COFFER DAM (DAM-IT-DAMS, AQUA BARRIER, OR EQUAL) IN CREEK TO SUPPORT THE CONSTRUCTION OF BRIDGES WHERE SHOWN. DAM TO BE SIZED AND LEASED TO THE CONTRACTOR BY MANUFACTURER. COFFER DAMS MAY NOT BE NECESSARY FOR CONSTRUCTION DEPENDING ON WATER LEVEL AT TIME OF CONSTRUCTION. IF THEY ARE DEEMED NOT NECESSARY, ALTERNATIVE MEANS OF PROTECTING THE CREEK MUST BE APPROVED BY MSD. COFFER DAM AREA TO BE DEWATERED BY PUMPING THROUGH A FILTER BAG TO A VEGETATED AREA AT LEAST 100' FROM THE STREAM.
9. SEE BIOENGINEERING PLANS FOR STABILIZATION MEASURES FOR AREAS AROUND BRIDGES. IF SPECIFIED PLANTINGS ARE NOT AVAILABLE FOR PLANTING WITHIN 14 CALENDAR DAYS OF AREA BEING BROUGHT TO FINAL GRADE, TEMPORARY SEEDING WILL BE REQUIRED.
10. DO NOT DISTURB ARCHEOLOGICAL OR GLADECRESS AREAS.
11. INSPECT BMP'S WEEKLY AND AFTER EVERY RAINFALL EVENT OF 0.5" OR GREATER.
12. REMOVE ALL BMP'S ONCE ALL CONSTRUCTION IS COMPLETED, DITCHES ARE RETURNED TO PLAN GRADES AND AREA IS STABILIZED PER MSD STANDARDS.

BMP LEGEND

SBIP	STONE BAG INLET PROTECTION EF-03/05/06-02
TGCE	TEMPORARY GRAVEL CONST. ENTRANCE/EXIT ER-01-02
OS	SCOUR STOP PAD OUTLET STABLIZATION
SB	TEMPORARY SEDIMENT BASIN MSD EXHIBIT 12-8
TSB	TEMPORARY SEDIMENT TRAP MSD EXHIBIT 12-9
PE	PIPE INLET PROTECTION PER DETAIL 1, SHEET G0.13.
SF#X	REINFORCED SILT FENCE EF-10-02
	STONE BAG CHECK DAM EF-12-02
DC / DC#X	ROCK DITCH CHECK EB-03-01
	TEMPORARY COFFER DAM
	PUMP AROUND FLOW DIVERSION ED-01-01

End Park Road
Sta. 520+50.00

LASATER ROAD

FLOYDS FORK

STOWN ROAD

0 40' 80'

Seals

STATE OF KENTUCKY
ROBERT D. MARTIN
15958
LICENSED
PROFESSIONAL ENGINEER
5/8/13

Engineering
Planning

1046 East Chestnut Street, Louisville, Kentucky 40204
Phone: 502-585-2222 Internet: www.qk4.com
Kentucky • Indiana • Georgia • Tennessee • Florida

LANDSCAPE ARCHITECT

Wallace Roberts & Todd, LLC

1700 Market Street
28th Floor
Philadelphia, PA 19103
tel 215.732.5215
fax 215.732.2551

Architect

BRAVURA

111 West Washington Street
Louisville, Kentucky 40202
T: (502) 584-9900
F: (502) 584-0029

The Parklands of Floyds Fork, Project 4A
The Strand, Turkey Run Park and Broad Run
Louisville, Kentucky

Owner:
21st Century Parks, Inc.
371 W. Main St., Suite 202
Louisville, Kentucky 40202

REV #	DATE	DESCRIPTION
2	05-30-2013	Addendum2, MSD comments

Job No: 12300.4AC
Date: May 8, 2013
Scale: H 1" = 40' V 1" = 40'
Drawn By:

BID SET

Drawing Title:

Parklands of Floyds Fork

PROJECT 4A
Park Road
Grading Plans
Sta. 499+00 to 521+01

Drawing No:

PR-C2.12

May 31, 2013 - 3:49pm
C:\Users\VMartin\Desktop\Temp\JeffPullen_59f13XGF4_LW-ROAD AND TRAIL GD-7.dwg (PR-C2.12)

SWPPP CONSTRUCTION NOTES AND PHASING:

1. *IMPORTANT* SEE GENERAL SWPPP NOTES, SHEET G0.13 FOR INFORMATION REGARDING PHASING OF DISTURBANCE FOR LINEAR CONSTRUCTION (ROADS AND TRAILS). BMP'S LISTED BELOW ARE REQUIRED REGARDLESS OF THE CONTRACTOR'S PHASING STRATEGY.
2. REFER TO MAINTENANCE OF TRAFFIC PLANS FOR CONSTRUCTION ACCESS INFORMATION. EACH ACCESS INTO THE CONSTRUCTION AREA MUST HAVE A TEMPORARY GRAVEL CONSTRUCTION ENTRANCE/EXIT INSTALLED PER MSD STANDARD DETAIL ER-01-02 ADJACENT TO PUBLIC ROADWAYS.
3. INSTALL PIPE END PROTECTION AT EACH END OF NEWLY CONSTRUCTED CULVERTS WHERE SHOWN AND PER DETAIL 1, G0.13.
4. INSTALL SCOUR STOP PADS AT PIPE OUTLETS ANCHORED PER MANUFACTURER'S RECOMMENDATIONS. PADDED AREA MUST BE A MINIMUM OF TWICE THE WIDTH OF THE PIPE AND 8 L.F. LONG. WHEN PIPE OUTLETS INTO A PERPENDICULAR DITCH THE PAD MUST EXTEND UP THE OPPOSITE SIDE BANK BY 4 L.F. PADS TO BE INSTALLED ON TOP OF SOD OR STRAW MAT, NOT ON BARE DIRT OR BLOWN STRAW. PADS ARE NOT NECESSARY ON ROCK FLOWLINES.
5. INSTALL STONE BAG INLET PROTECTION AT INLET HEADWALLS AND CATCH BASINS AS SHOWN AND PER MSD STANDARD DRAWINGS, EF-03-02, EF-05-02 AND EF-06-02. STONE BAGS ARE NOT PERMITTED TO BE PLACED WHERE PIPES ARE CONSTRUCTED IN EXISTING DRAWS.
6. CONSTRUCT PUMP AROUND FLOW DIVERSION WHERE SHOWN AND PER MSD STANDARD DRAWING ED-01-01. INSTALL REINFORCED SILT FENCE WHERE SHOWN AND PER MSD STANDARD DRAWING EF-12-02.
7. SEE SITE PLANS, SHEET BV-C5.3 FOR AREA SPECIFIC BMP'S.
8. DO NOT DISTURB ARCHEOLOGICAL OR GLADECRESS AREAS.
9. INSPECT BMP'S WEEKLY AND AFTER EVERY RAINFALL EVENT OF 0.5" OR GREATER.
10. REMOVE ALL BMP'S ONCE ALL CONSTRUCTION IS COMPLETED, DITCHES ARE RETURNED TO PLAN GRADES AND AREA IS STABILIZED PER MSD STANDARDS.

BMP LEGEND

SBIP	STONE BAG INLET PROTECTION EF-03/05/06-02
TCCE	TEMPORARY GRAVEL CONST. ENTRANCE/EXIT ER-01-02
OS	SCOUR STOP PAD OUTLET STABLIZATION
SB	TEMPORARY SEDIMENT BASIN MSD EXHIBIT 12-8
TS	TEMPORARY SEDIMENT TRAP MSD EXHIBIT 12-9
PE	PIPE INLET PROTECTION PER DETAIL 1, SHEET G0.13.
SF#X	REINFORCED SILT FENCE EF-10-02
	STONE BAG CHECK DAM EF-12-02
DC DC#X	ROCK DITCH CHECK EB-03-01
	TEMPORARY COFFER DAM
	PUMP AROUND FLOW DIVERSION ED-01-01
	12" DIA. WATTLE LOG

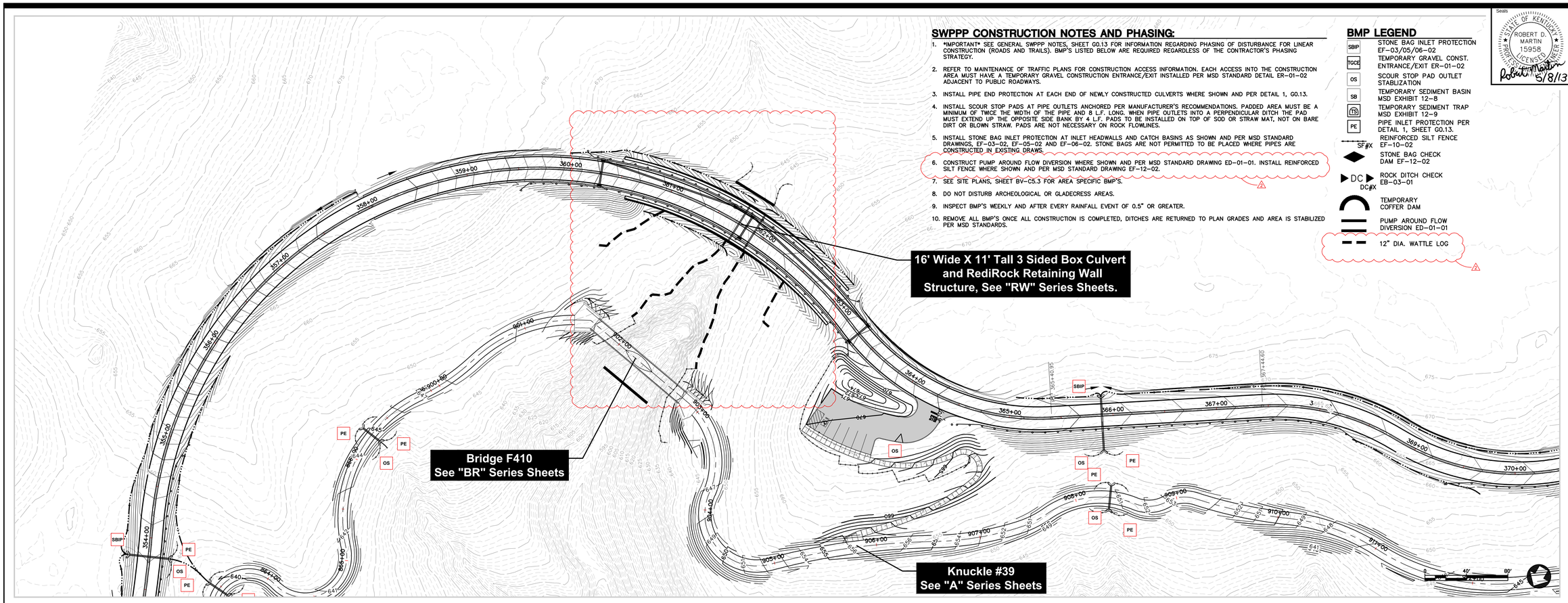

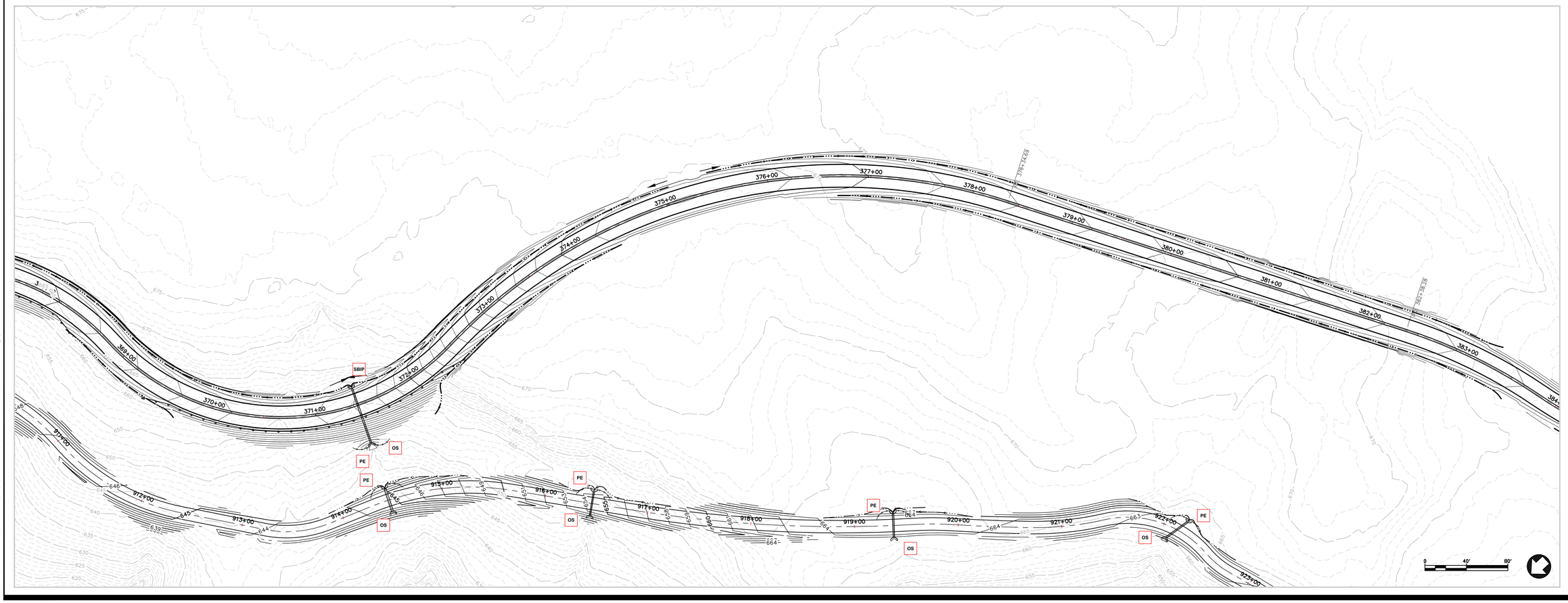

Seals

STATE OF KENTUCKY ROBERT D. MARTIN 15958 LICENSED PROFESSIONAL ENGINEER

Robert D. Martin 5/8/13

Engineering
Planning

1046 East Chestnut Street, Louisville, Kentucky 40204
Phone: 502-585-2222 Internet: www.qk4.com
Kentucky • Indiana • Georgia • Tennessee • Florida

LANDSCAPE ARCHITECT

WRT

Wallace Roberts & Todd, LLC
1700 Market Street
28th Floor
Philadelphia, PA 19103
tel 215.732.5215
fax 215.732.2551

Architect

BRAVURA
111 West Washington Street
Louisville, Kentucky 40202
T: (502) 584-9900
F: (502) 584-0829

The Parklands of Floyds Fork, Project 4A

The Strand, Turkey Run Park and Broad Run
Louisville, Kentucky

Owner:
21st Century Parks, Inc.
371 W. Main St., Suite 202
Louisville, Kentucky 40202

REV #	DATE	DESCRIPTION
2	05-30-2013	Addendum #2: MSD comments

Job No:	12300.4AC
Date:	May 8, 2013
Scale:	H 1" = 40' V 1" = 40'
Drawn By:	

BID SET

Drawing Title:

Parklands of Floyds Fork

PROJECT 4A
Park Road
Grading Plans
Sta. 355+00 to 383+00

Drawing No:

PR-C2.8

May 31, 2013 - 3:33pm
C:\Users\fuller.PAI-NT\appdata\local\temp\AcPublish_596\21CP4 LW-ROAD AND TRAIL GD-6.dwg (PR-C2.8)

Knuckle #33
See "A" Series Sheets

Park/Stout Road
Sta. 255+43.98 Back =
Sta. 300+00.00 Ahead

Knuckle #34
See "A" Series Sheets

Knuckle #35
See "A" Series Sheets

Bridge F409
See "BR" Series Sheets

Knuckle #37
See "A" Series Sheets

SUPPLEMENTAL BRIDGE SPECIFIC CONSTRUCTION NOTES AND PHASING:

1. *IMPORTANT* SEE GENERAL SWPPP NOTES, SHEET G0.13 FOR INFORMATION REGARDING PHASING OF DISTURBANCE FOR LINEAR CONSTRUCTION (ROADS AND TRAILS). BMP'S LISTED BELOW ARE REQUIRED REGARDLESS OF THE CONTRACTOR'S PHASING STRATEGY.
2. CLEAR AREA SURROUNDING BRIDGE ABUTMENTS / PIERS.
3. INSTALL REINFORCED SILT FENCE WHERE SHOWN AND PER MSD STANDARD DETAIL EF-10-02.
4. INSTALL TEMPORARY PORTABLE COFFER DAM (DAM-IT-DAMS, AQUA BARRIER, OR EQUAL) IN CREEK TO SUPPORT THE CONSTRUCTION OF BRIDGES WHERE SHOWN. DAM TO BE SIZED AND LEASED TO THE CONTRACTOR BY MANUFACTURER. COFFER DAMS MAY NOT BE NECESSARY FOR CONSTRUCTION DEPENDING ON WATER LEVEL AT TIME OF CONSTRUCTION. IF THEY ARE DEEMED NOT NECESSARY, ALTERNATIVE MEANS OF PROTECTING THE CREEK MUST BE APPROVED BY MSD. COFFER DAM AREA TO BE DEWATERED BY PUMPING THROUGH A FILTER BAG TO A VEGETATED AREA AT LEAST 100' FROM THE STREAM.
5. PERFORM ROUGH GRADING OPERATIONS AT ABUTMENTS WHILE KEEPING THE DISTURBED LIMITS TO AN ABSOLUTE MINIMUM.
6. IF ROUGH GRADED AREA AROUND ABUTMENTS / PIERS REMAIN IN A STATE WHERE THE PERMANENT BIOENGINEERING STABILIZATION MEASURES CANNOT BE INSTALLED WITHIN 14 DAYS OF CONSTRUCTION ACTIVITIES, THEN THE CONTRACTOR MUST TEMPORARILY SEED AND STRAW DISTURBED AREAS. HOWEVER THE CONTRACTOR SHALL BE REQUIRED TO INSTALL THE PERMANENT BIOENGINEERING STABILIZATION MEASURES AS SOON AS IT IS PRACTICE TO DO SO.
6. CONSTRUCT ABUTMENTS / PIERS / ERECT BRIDGE
7. FINAL GRADE DISTURBED AREAS
8. INSTALL PERMANENT BIOENGINEERING STABILIZATION MEASURES AS DETAILED IN BR SERIES SHEETS.
9. DO NOT DISTURB ARCHEOLOGICAL OR GLADECRESS AREAS.
10. INSPECT BMP'S WEEKLY AND AFTER EVERY RAINFALL EVENT OF 0.5" OR GREATER.
11. REMOVE ALL BMP'S ONCE ALL CONSTRUCTION IS COMPLETED, DITCHES ARE RETURNED TO PLAN GRADES AND AREA IS STABILIZED PER MSD STANDARDS.

SWPPP CONSTRUCTION NOTES AND PHASING:

1. *IMPORTANT* SEE GENERAL SWPPP NOTES, SHEET G0.13 FOR INFORMATION REGARDING PHASING OF DISTURBANCE FOR LINEAR CONSTRUCTION (ROADS AND TRAILS). BMP'S LISTED BELOW ARE REQUIRED REGARDLESS OF THE CONTRACTOR'S PHASING STRATEGY.
2. REFER TO MAINTENANCE OF TRAFFIC PLANS FOR CONSTRUCTION ACCESS INFORMATION. EACH ACCESS INTO THE CONSTRUCTION AREA MUST HAVE A TEMPORARY GRAVEL CONSTRUCTION ENTRANCE/EXIT INSTALLED PER MSD STANDARD DETAIL ER-01-02 ADJACENT TO PUBLIC ROADWAYS.
3. INSTALL PIPE END PROTECTION AT EACH END OF NEWLY CONSTRUCTED CULVERTS WHERE SHOWN AND PER DETAIL 1, G0.13.
4. INSTALL SCOUR STOP PADS AT PIPE OUTLETS ANCHORED PER MANUFACTURER'S RECOMMENDATIONS. PADDED AREA MUST BE A MINIMUM OF TWICE THE WIDTH OF THE PIPE AND 8 L.F. LONG. WHEN PIPE OUTLETS INTO A PERPENDICULAR DITCH THE PAD MUST EXTEND UP THE OPPOSITE SIDE BANK BY 4 L.F. PADS TO BE INSTALLED ON TOP OF SOD OR STRAW MAT, NOT ON BARE DIRT OR BLOWN STRAW. PADS ARE NOT NECESSARY ON ROCK FLOWLINES.
5. INSTALL STONE BAG INLET PROTECTION AT INLET HEADWALLS AND CATCH BASINS AS SHOWN AND PER MSD STANDARD DRAWINGS, EF-03-02, EF-05-02 AND EF-06-02. STONE BAGS ARE NOT PERMITTED TO BE PLACED WHERE PIPES ARE CONSTRUCTED IN EXISTING DRAINS.
6. CONSTRUCT PUMP AROUND FLOW DIVERSION WHERE SHOWN AND PER MSD STANDARD DRAWING ED-01-01. INSTALL REINFORCED SILT FENCE WHERE SHOWN AND PER MSD STANDARD DRAWING EF-12-02.
7. DO NOT DISTURB ARCHEOLOGICAL OR GLADECRESS AREAS.
8. INSPECT BMP'S WEEKLY AND AFTER EVERY RAINFALL EVENT OF 0.5" OR GREATER.
9. REMOVE ALL BMP'S ONCE ALL CONSTRUCTION IS COMPLETED, DITCHES ARE RETURNED TO PLAN GRADES AND AREA IS STABILIZED PER MSD STANDARDS.

BMP LEGEND

SBIP	STONE BAG INLET PROTECTION EF-03/05/06-02
TGCE	TEMPORARY GRAVEL CONST. ENTRANCE/EXIT ER-01-02
OS	SCOUR STOP PAD OUTLET STABLIZATION
SB	TEMPORARY SEDIMENT BASIN MSD EXHIBIT 12-8
TB	TEMPORARY SEDIMENT TRAP MSD EXHIBIT 12-9
PE	PIPE INLET PROTECTION PER DETAIL 1, SHEET G0.13.
SF#X	REINFORCED SILT FENCE EF-10-02
	STONE BAG CHECK DAM EF-12-02
DC DC#X	ROCK DITCH CHECK EB-03-01
	TEMPORARY COFFER DAM
	PUMP AROUND FLOW DIVERSION ED-01-01

Seals

STATE OF KENTUCKY
ROBERT D. MARTIN
15958
PROFESSIONAL ENGINEER
5/8/13

Engineering
Planning
QK4
1046 East Chestnut Street, Louisville, Kentucky 40204
Phone: 502-585-2222 Internet: www.qk4.com
Kentucky • Indiana • Georgia • Tennessee • Florida

LANDSCAPE ARCHITECT
WRT
Wallace Roberts & Todd, LLC
1700 Market Street
28th Floor
Philadelphia, PA 19103
tel 215.732.5215
fax 215.732.2551

Architect
BRAVURA
111 West Washington Street
Louisville, Kentucky 40202
T: (502) 584-9900
F: (502) 584-0929

The Parklands of Floyds Fork, Project 4A

The Strand, Turkey Run Park and Broad Run
Louisville, Kentucky

Owner:
21st Century Parks, Inc.
371 W. Main St., Suite 202
Louisville, Kentucky 40202

REV #	DATE	DESCRIPTION
2	05-30-2013	Addendum #2, MSD comments

Job No: 12300.4AC
Date: May 8, 2013
Scale: H 1" = 40' V 1" = 40'
Drawn By:

BID SET

Drawing Title:
Parklands of Floyds Fork

PROJECT 4A
Park Road
Grading Plans
Sta. 300+00 to 327+00

Drawing No:
PR-C2.6

May 31, 2013 - 3:32pm
C:\Users\Victor.Paz-Ortiz\appdata\local\temp\AcPublish_5963\2\G04 LIN-ROAD AND TRAIL GD-6.dwg (PR-C2.6)

SWPPP CONSTRUCTION NOTES AND PHASING:

1. *IMPORTANT* SEE GENERAL SWPPP NOTES, SHEET G0.13 FOR INFORMATION REGARDING PHASING OF DISTURBANCE FOR LINEAR CONSTRUCTION (ROADS AND TRAILS). BMP'S LISTED BELOW ARE REQUIRED REGARDLESS OF THE CONTRACTOR'S PHASING STRATEGY.
2. REFER TO MAINTENANCE OF TRAFFIC PLANS FOR CONSTRUCTION ACCESS INFORMATION. EACH ACCESS INTO THE CONSTRUCTION AREA MUST HAVE A TEMPORARY GRAVEL CONSTRUCTION ENTRANCE/EXIT INSTALLED PER MSD STANDARD DETAIL ER-01-02 ADJACENT TO PUBLIC ROADWAYS.
3. INSTALL PIPE END PROTECTION AT EACH END OF NEWLY CONSTRUCTED CULVERTS WHERE SHOWN AND PER DETAIL 1, G0.13.
4. INSTALL STONE DITCH CHECK DC#PR-C2.5-1 AND DC#PR-C2.5-2 WHERE SHOWN AND PER MSD STANDARD DETAIL EB-03-01.
5. INSTALL SCOUR STOP PADS AT PIPE OUTLETS ANCHORED PER MANUFACTURER'S RECOMMENDATIONS. PADDED AREA MUST BE A MINIMUM OF TWICE THE WIDTH OF THE PIPE AND 8 L.F. LONG. WHEN PIPE OUTLETS INTO A PERPENDICULAR DITCH THE PAD MUST EXTEND UP THE OPPOSITE SIDE BANK BY 4 L.F. PADS TO BE INSTALLED ON TOP OF SOD OR STRAW MAT, NOT ON BARE DIRT OR BLOWN STRAW. PADS ARE NOT NECESSARY ON ROCK FLOWLINES.
6. INSTALL STONE BAG INLET PROTECTION AT INLET HEADWALLS AND CATCH BASINS AS SHOWN AND PER MSD STANDARD DRAWINGS, EF-03-02, EF-05-02 AND EF-06-02. STONE BAGS ARE NOT PERMITTED TO BE PLACED WHERE PIPES ARE CONSTRUCTED IN EXISTING DRAWS.
7. SEE SITE PLANS, SHEET SC-C5.1 FOR AREA SPECIFIC BMP'S.
8. DO NOT DISTURB ARCHEOLOGICAL OR GLADECRESS AREAS.
9. INSPECT BMP'S WEEKLY AND AFTER EVERY RAINFALL EVENT OF 0.5" OR GREATER.
10. REMOVE ALL BMP'S ONCE ALL CONSTRUCTION IS COMPLETED, DITCHES ARE RETURNED TO PLAN GRADES AND AREA IS STABILIZED PER MSD STANDARDS.

BMP LEGEND

- SBIP — STONE BAG INLET PROTECTION EF-03/05/06-02
- TGCE — TEMPORARY GRAVEL CONST. ENTRANCE/EXIT ER-01-02
- OS — SCOUR STOP PAD OUTLET STABILIZATION
- SB — TEMPORARY SEDIMENT BASIN MSD EXHIBIT 12-8
- TEMPORARY SEDIMENT TRAP MSD EXHIBIT 12-9
- PE — PIPE INLET PROTECTION PER DETAIL 1, SHEET G0.13.
- SF#X — REINFORCED SILT FENCE EF-10-02
- STONE BAG CHECK DAM EF-12-02
- DC# / DC#X — ROCK DITCH CHECK EB-03-01
- TEMPORARY COFFER DAM
- PUMP AROUND FLOW DIVERSION ED-01-01

Seals

STATE OF KENTUCKY
ROBERT D. MARTIN
15958
PROFESSIONAL ENGINEER
LICENSED
5/8/13

DC#PR-C2.5-2
DC#PR-C2.5-1
EXISTING POND
Feeding Barn
Silo
Retaining Wall
See "RW" Series Sheets
Knuckle #30
See "A" Series Sheets
8" Waterline Relocation
STOUT ROAD
TOUT ROAD
Knuckle #33
See "A" Series Sheets
Park/Stout Road
Sta. 255+43.98 Back =
Sta. 300+00.00 Ahead
8" Waterline Relocation
Sandstone

Engineering
Planning

1046 East Chestnut Street, Louisville, Kentucky 40204
Phone: 502.585.2222 Internet: www.qk4.com
Kentucky • Indiana • Georgia • Tennessee • Florida

LANDSCAPE ARCHITECT
WRT
Wallace Roberts & Todd, LLC
1700 Market Street
28th Floor
Philadelphia, PA 19103
tel 215.732.5215
fax 215.732.2551

Architect
BRAVURA
111 West Washington Street
Louisville, Kentucky 40202
T: (502) 584-9900
F: (502) 584-0929

The Parklands of Floyds Fork, Project 4A

The Strand, Turkey Run Park and Broad Run
Louisville, Kentucky

Owner:
21st Century Parks, Inc.
371 W. Main St., Suite 202
Louisville, Kentucky 40202

REV #	DATE	DESCRIPTION
2	05-30-2013	Addendum2, LMSD comments

Job No: 12300.4AC
Date: May 8, 2013
Scale: H 1" = 40' V 1" = 40'
Drawn By:

BID SET

Drawing Title:

Parklands of Floyds Fork

PROJECT 4A
Park Road
Grading Plans
Sta. 227+00 to 255+44

Drawing No:

PR-C2.5

May 30, 2013 – 5:58pm
C:\Users\Vince\Dropbox\Work\temp\MxPublish_8108\210P4 LIN-ROAD AND TRAIL GD-5.dwg (PR-C2.5)

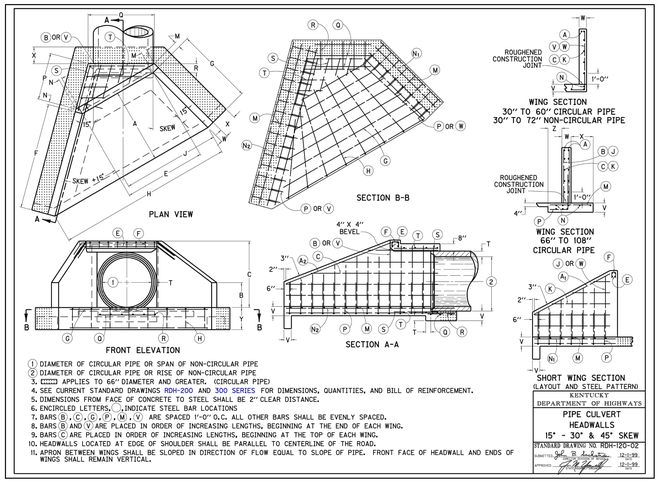

1. DIAMETER OF CIRCULAR PIPE OR SPAN OF NON-CIRCULAR PIPE
2. DIAMETER OF CIRCULAR PIPE OR RISE OF NON-CIRCULAR PIPE
3. ▭ APPLIES TO 66" DIAMETER AND GREATER. (CIRCULAR PIPE)
4. SEE CURRENT STANDARD DRAWINGS RDH-200 AND 300 SERIES FOR DIMENSIONS, QUANTITIES, AND BILL OF REINFORCEMENT.
5. DIMENSIONS FROM FACE OF CONCRETE TO STEEL SHALL BE 2" CLEAR DISTANCE.
6. ENCIRCLED LETTERS, ⓖ,ⓠ,INDICATE STEEL BAR LOCATIONS
7. BARS Ⓑ,Ⓒ,Ⓖ,Ⓟ,Ⓦ,Ⓥ ARE SPACED 1'-0" O.C. ALL OTHER BARS SHALL BE EVENLY SPACED.
8. BARS Ⓑ AND Ⓥ ARE PLACED IN ORDER OF INCREASING LENGTHS, BEGINNING AT THE END OF EACH WING.
9. BARS Ⓒ ARE PLACED IN ORDER OF INCREASING LENGTHS, BEGINNING AT THE TOP OF EACH WING.
10. HEADWALLS LOCATED AT EDGE OF SHOULDER SHALL BE PARALLEL TO CENTERLINE OF THE ROAD.
11. APRON BETWEEN WINGS SHALL BE SLOPED IN DIRECTION OF FLOW EQUAL TO SLOPE OF PIPE. FRONT FACE OF HEADWALL AND ENDS OF WINGS SHALL REMAIN VERTICAL.

KENTUCKY DEPARTMENT OF HIGHWAYS
PIPE CULVERT HEADWALLS 15° - 30° & 45° SKEW
STANDARD DRAWING NO. RDH-120-02
SUBMITTED: 12-3-99
APPROVED: 12-3-99

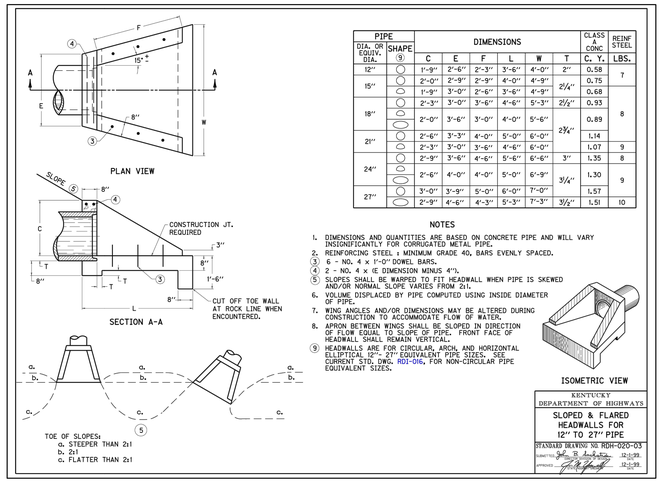

PIPE DIA. OR EQUIV. DIA.	SHAPE ⑨	DIMENSIONS C	E	F	L	W	T	CLASS A CONC C. Y.	REINF STEEL LBS.
12"	○	1'-9"	2'-6"	2'-3"	3'-6"	4'-0"	2"	0.58	7
15"	○	2'-0"	2'-9"	2'-9"	4'-0"	4'-9"	2¼"	0.75	
	⬭	1'-9"	3'-0"	2'-6"	3'-6"	4'-9"		0.68	
18"	○	2'-3"	3'-0"	3'-6"	4'-6"	5'-3"	2½"	0.93	8
	⬭	2'-0"	3'-6"	3'-0"	4'-0"	5'-6"		0.89	
21"	○	2'-6"	3'-3"	4'-0"	5'-0"	6'-0"	2¾"	1.14	
	⬭	2'-3"	3'-0"	3'-6"	4'-6"	6'-0"		1.07	9
24"	○	2'-9"	3'-6"	4'-6"	5'-6"	6'-6"	3"	1.35	8
	⬭	2'-6"	4'-0"	4'-0"	5'-0"	6'-9"	3¼"	1.30	9
27"	○	3'-0"	3'-9"	5'-0"	6'-0"	7'-0"		1.57	
	⬭	2'-9"	4'-6"	4'-3"	5'-3"	7'-3"	3½"	1.51	10

NOTES

1. DIMENSIONS AND QUANTITIES ARE BASED ON CONCRETE PIPE AND WILL VARY INSIGNIFICANTLY FOR CORRUGATED METAL PIPE.
2. REINFORCING STEEL : MINIMUM GRADE 40, BARS EVENLY SPACED.
3. 6 - NO. 4 x 1'-0" DOWEL BARS.
4. 2 - NO. 4 x (E DIMENSION MINUS 4").
5. SLOPES SHALL BE WARPED TO FIT HEADWALL WHEN PIPE IS SKEWED AND/OR NORMAL SLOPE VARIES FROM 2:1.
6. VOLUME DISPLACED BY PIPE COMPUTED USING INSIDE DIAMETER OF PIPE.
7. WING ANGLES AND/OR DIMENSIONS MAY BE ALTERED DURING CONSTRUCTION TO ACCOMMODATE FLOW OF WATER.
8. APRON BETWEEN WINGS SHALL BE SLOPED IN DIRECTION OF FLOW EQUAL TO SLOPE OF PIPE. FRONT FACE OF HEADWALL SHALL REMAIN VERTICAL.
9. HEADWALLS ARE FOR CIRCULAR, ARCH, AND HORIZONTAL ELLIPTICAL 12"~ 27" EQUIVALENT PIPE SIZES. SEE CURRENT STD. DWG. RDI-016, FOR NON-CIRCULAR PIPE EQUIVALENT SIZES.

KENTUCKY DEPARTMENT OF HIGHWAYS
SLOPED & FLARED HEADWALLS FOR 12" TO 27" PIPE
STANDARD DRAWING NO. RDH-020-03
SUBMITTED: 12-3-99
APPROVED: 12-3-99

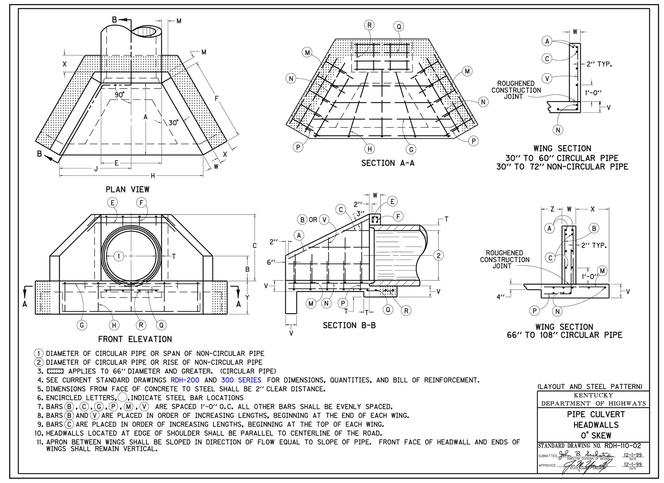

1. DIAMETER OF CIRCULAR PIPE OR SPAN OF NON-CIRCULAR PIPE
2. DIAMETER OF CIRCULAR PIPE OR RISE OF NON-CIRCULAR PIPE
3. ▭ APPLIES TO 66" DIAMETER AND GREATER. (CIRCULAR PIPE)
4. SEE CURRENT STANDARD DRAWINGS RDH-200 AND 300 SERIES FOR DIMENSIONS, QUANTITIES, AND BILL OF REINFORCEMENT.
5. DIMENSIONS FROM FACE OF CONCRETE TO STEEL SHALL BE 2" CLEAR DISTANCE.
6. ENCIRCLED LETTERS, ⓖ,ⓠ,INDICATE STEEL BAR LOCATIONS
7. BARS Ⓑ,Ⓒ,Ⓖ,Ⓟ,Ⓜ,Ⓥ ARE SPACED 1'-0" O.C. ALL OTHER BARS SHALL BE EVENLY SPACED.
8. BARS Ⓑ AND Ⓥ ARE PLACED IN ORDER OF INCREASING LENGTHS, BEGINNING AT THE END OF EACH WING.
9. BARS Ⓒ ARE PLACED IN ORDER OF INCREASING LENGTHS, BEGINNING AT THE TOP OF EACH WING.
10. HEADWALLS LOCATED AT EDGE OF SHOULDER SHALL BE PARALLEL TO CENTERLINE OF THE ROAD.
11. APRON BETWEEN WINGS SHALL BE SLOPED IN DIRECTION OF FLOW EQUAL TO SLOPE OF PIPE. FRONT FACE OF HEADWALL AND ENDS OF WINGS SHALL REMAIN VERTICAL.

KENTUCKY DEPARTMENT OF HIGHWAYS
PIPE CULVERT HEADWALLS 0° SKEW
STANDARD DRAWING NO. RDH-110-02
SUBMITTED: 12-3-99
APPROVED: 12-3-99

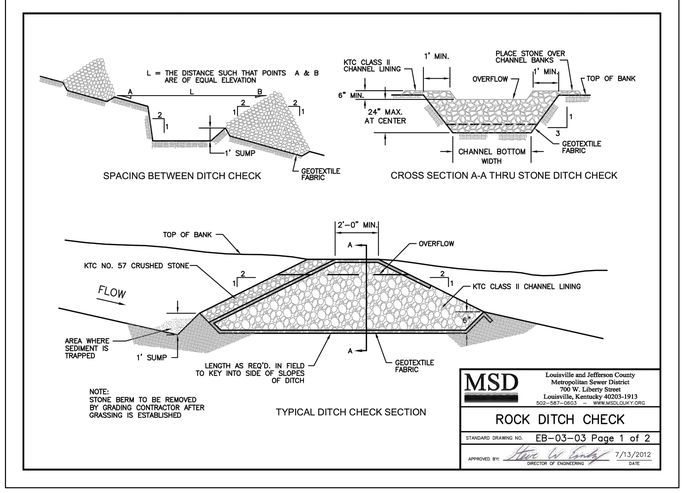

MSD — Louisville and Jefferson County Metropolitan Sewer District, 700 W. Liberty Street, Louisville, Kentucky 40203-1913, 502-587-0603 - WWW.MSDLOUKY.ORG

ROCK DITCH CHECK
STANDARD DRAWING NO. EB-03-03 Page 1 of 2
APPROVED BY: DIRECTOR OF ENGINEERING — 7/13/2012 DATE

ROCK DITCH CHECK

When and Where to Use It

A rock ditch check should be installed in steeply sloped swales, or in swales where adequate vegetation cannot be established. Rock ditch checks should be used only in small open channels. Rock ditch checks should not be placed in waters of the commonwealth (unless approved by state authorities).

Installation:

A geotextile fabric shall be installed over the soil surface where the rock ditch check is to be placed and laid under the KTC #57 crushed stone extending to the downstream slope of the rock check.

The body of the rock ditch check shall be composed of KTC Class II channel lining.

The upstream face of the rock ditch check shall be composed of KTC #57 crushed stone.

Rock ditch checks should not exceed a height of 2-feet at the centerline of the channel.

Rock ditch checks should have a minimum top flow length of 2-feet.

Stone should be placed over the channel banks prevent water from cutting around the ditch check.

The rock must be placed by hand or mechanical placement (no dumping of rock to form dam) to achieve complete coverage of the ditch or swale and to ensure that the center of the check is lower than the edges.

The maximum spacing between the dams should be such that the toe of the upstream check is at the same elevation as the top of the downstream check.

Inspection and Maintenance:

Inspect rock ditch checks every seven (7) calendar days and within 24-hours after each rainfall event that produces ½-inches or more of precipitation. Inspect for sediment and debris accumulation. Inspect ditch check edges for erosion and repair promptly as required.

Sediment should be removed when it reaches 1/3 the original check height.

In the case of grass-lined ditches and swales, rock ditch checks should be removed when the grass has matured sufficiently to protect the ditch or swale unless the slope of the swale is greater than 4%.

After construction is complete, all stone should be removed if vegetation will be used for permanent erosion control measures.

The area beneath the rock ditch checks should be seeded and mulched immediately after rock check dam removal.

MSD — Louisville and Jefferson County Metropolitan Sewer District, 700 W. Liberty Street, Louisville, Kentucky 40203-1913, 502-587-0603 - WWW.MSDLOUKY.ORG

ROCK DITCH CHECK
STANDARD DRAWING NO. EB-03-03 Page 2 of 2
APPROVED BY: DIRECTOR OF ENGINEERING — 7/13/2012 DATE

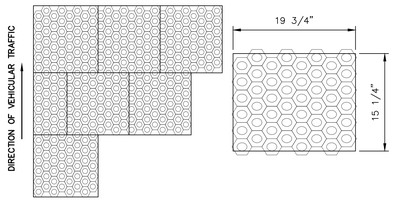

ASSEMBLY LAYOUT

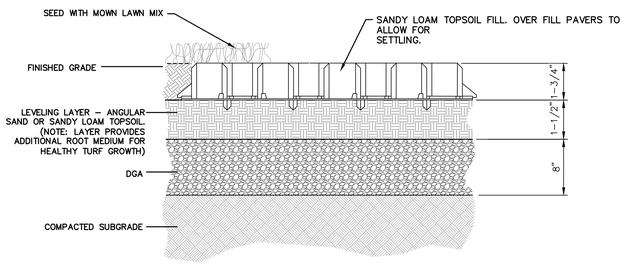

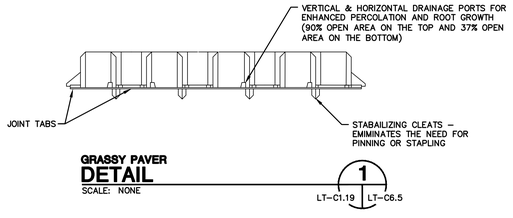

GRASSY PAVER DETAIL
SCALE: NONE
1 — LT-C1.19 LT-C6.5

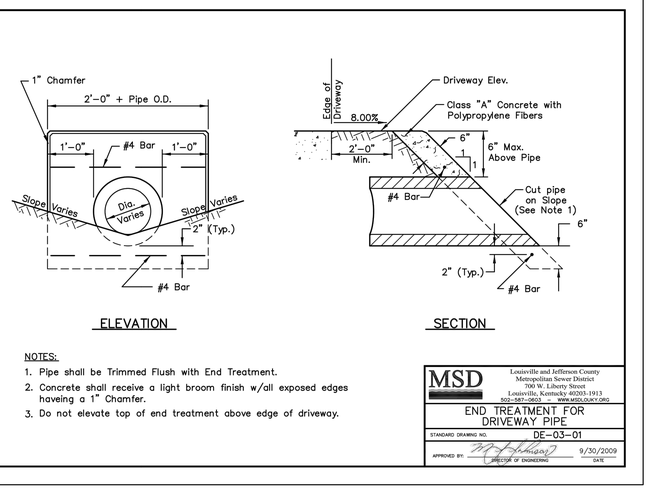

NOTES:
1. Pipe shall be Trimmed Flush with End Treatment.
2. Concrete shall receive a light broom finish w/all exposed edges haveing a 1" Chamfer.
3. Do not elevate top of end treatment above edge of driveway.

MSD — Louisville and Jefferson County Metropolitan Sewer District, 700 W. Liberty Street, Louisville, Kentucky 40203-1913, 502-587-0603 WWW.MSDLOUKY.ORG

END TREATMENT FOR DRIVEWAY PIPE
STANDARD DRAWING NO. DE-03-01
APPROVED BY: DIRECTOR OF ENGINEERING — 9/30/2009 DATE

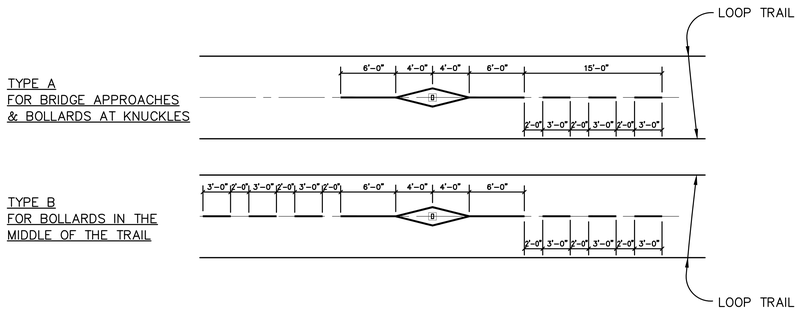

LOOP STRIPING DETAIL
SCALE: NONE
2 — LT-C6.5

Seals
STATE OF KENTUCKY — ROBERT D. MARTIN 15958 — LICENSED PROFESSIONAL ENGINEER
Robert D. Martin 5/8/13

Engineering
Planning
1046 East Chestnut Street, Louisville, Kentucky 40204
502.584.6300 - www.qkpartners.com
Kentucky • Indiana • Georgia • Tennessee • Florida

LANDSCAPE ARCHITECT
WRT
Wallace Roberts & Todd, LLC
1700 Market Street
28th Floor
Philadelphia, PA 19103
tel 215.732.5215
fax 215.732.2551

Architect
BRAVURA
111 West Washington Street
Louisville, Kentucky 40202
T: (502) 584-9900
F: (502) 584-0829

The Parklands of Floyds Fork, Project 4A
The Strand, Turkey Run Park and Broad Run
Louisville, Kentucky

Owner:
21st Century Parks, Inc.
371 W. Main St. Suite 202
Louisville, Kentucky 40202

REV #	DATE	DESCRIPTION
2	05-30-2013	Addendum#2: Added Ditch Check, Loop Striping & Paver Details

Job No: 12300.4AC
Date: May 8, 2013
Scale:
Drawn By:
BID SET

Drawing Title:
Parklands of Floyds Fork
PROJECT 4A Loop Trail Details

Drawing No:
LT-C6.5

May 31, 2013 - 1:09pm
N:\12300.4AC - 21st Century Parks Phase 4A\SITE\Dwgs\Cdocs\12300.4AC-DTL-LT.dwg (LT-C6.5)

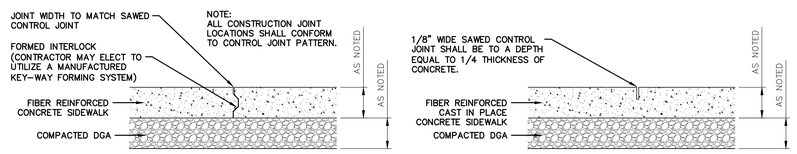

CONSTRUCTION JOINT

CRACK CONTROL (CONTRACTION) JOINT

NOTE: CONTRACTION TO OCCUR AT 10' O.C. (TYPICAL)

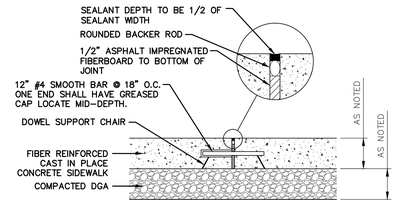

EXPANSION (ISOLATION) JOINT

NOTE: ISOLATION JOINTS TO OCCUR AT 30' O.C. (TYPICAL)

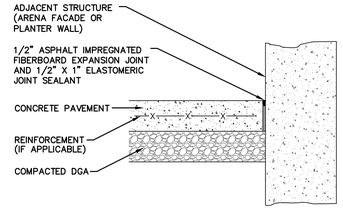

CONCRETE PAVEMENT AT STRUCTURE

LOUISVILLE LOOP TRAIL CONCRETE TRAIL JOINTS
DETAIL 1
SCALE: NONE — LT SERIES | LT-C6.1

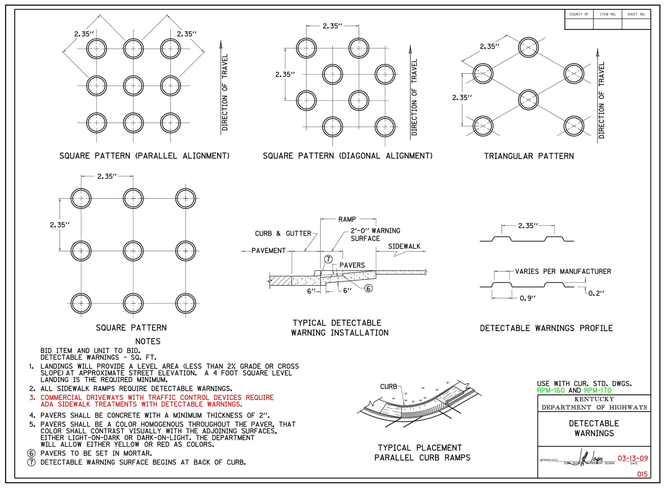

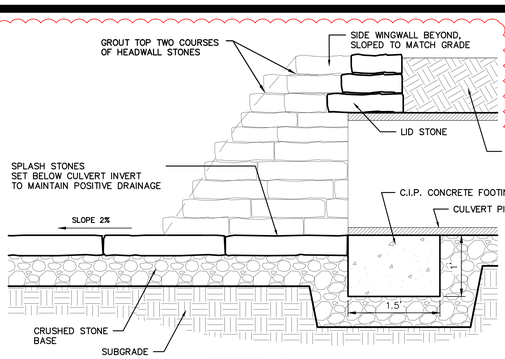

SECTION A-A

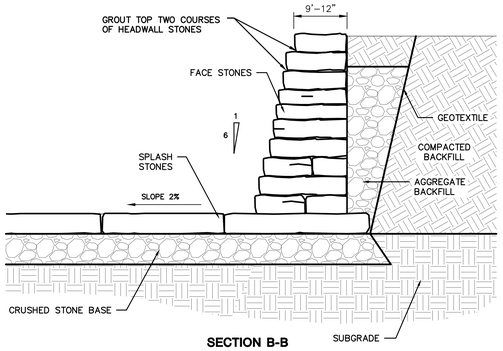

SECTION B-B

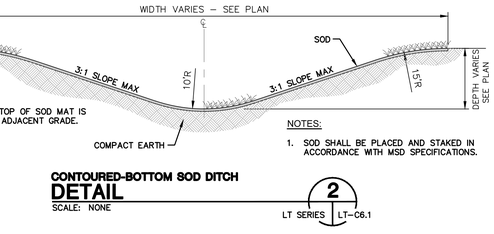

NOTES:
1. SOD SHALL BE PLACED AND STAKED IN ACCORDANCE WITH MSD SPECIFICATIONS.

CONTOURED-BOTTOM SOD DITCH
DETAIL 2
SCALE: NONE — LT SERIES | LT-C6.1

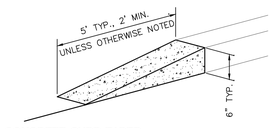

CONCRETE CURB TAPER
DETAIL 3
SCALE: NONE — LT SERIES | LT-C6.1

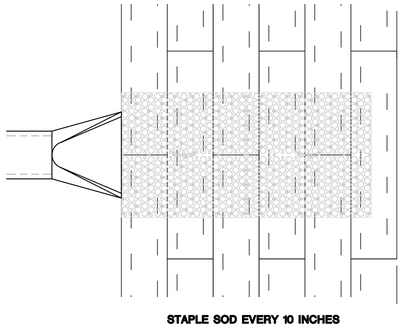

STAPLE SOD EVERY 10 INCHES WITHIN 4 INCHES OF LEADING EDGE AND RANDOMLY THROUGHOUT

STAPLED SOD DETAILS

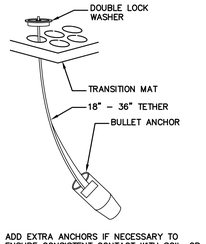

ADD EXTRA ANCHORS IF NECESSARY TO ENSURE CONSISTENT CONTACT WITH SOIL, OR IMPROVE SOIL SURFACE SMOOTHNESS.

COHESIVE SOILS SCOURSTOP TRANSITION MAT INSTALLATION DETAILS

TRM/SOD COMBINATION INSTALLATION DETAILS

TURF REINFORCEMENT MAT INSTALLED OVER SOD:
– TRM INSTALLED SOD TO 1" HEIGHT. INSTALL TRM OVER INSTALLED SOD. STRETCH TRM TIGHTLY ACROSS INSTALLATION SURFACE AREA. INSTALL STAPLES AT MAX. OF 18" APART (450 MM). IRRIGATE SOD AS NEEDED AFTER INSTALLATION TO AID IN ESTABLISHMENT OF VEGETATION.
– SOD DOWNSTREAM OF MAT INSTALLATION AREA DOES NOT NEED TRIMMED BEFORE MAT INSTALLATION.
– TO HOLD SOD IN PLACE DOWNSTREAM OF TM'S, INSTALL WIRE STAPLES AT 8" O.C. WITHIN 4" OF UPSTREAM EDGE OF SOD, AND AT A RATE OF ONE STAPLE PER SQUARE FOOT STAGGERED THROUGHOUT.

==> FOR DESIGN INFORMATION, REFER TO "DESIGN METHODOLOGY" DOCUMENT AVAILABLE AT www.scourstop.com.

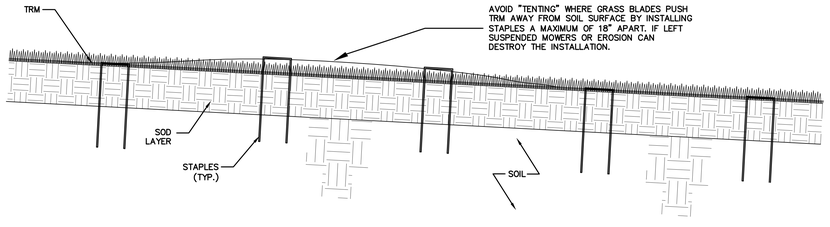

SCOURSTOP OUTLET STABILIZATION
DETAIL 4
SCALE: NONE — LT SERIES | LT-C6.1

PLAN VIEW

FRONT ELEVATION

DRY LAID STONE HEADWALL
DETAIL 5
SCALE: NONE — LT SERIES | LT-C6.1

Seals
COMMONWEALTH OF KENTUCKY
ROBERT D. MARTIN
15958
LICENSED
PROFESSIONAL ENGINEER
5/8/13

Engineering
Planning
1046 East Chestnut Street, Louisville, Kentucky 40204
T: (502) 584-6858 F: (502) 584-0829
Kentucky • Indiana • Georgia • Tennessee • Florida

LANDSCAPE ARCHITECT
Wallace Roberts & Todd, LLC
1700 Market Street
28th Floor
Philadelphia, PA 19103
tel 215.732.5215
fax 215.732.2551

Architect
BRAVURA
111 West Washington Street
Louisville, Kentucky 40202
T: (502) 584-9900
F: (502) 584-0829

The Parklands of Floyds Fork, Project 4A
The Strand, Turkey Run Park and Broad Run
Louisville, Kentucky

Owner:
21st Century Parks, Inc.
371 W. Main St., Suite 202
Louisville, Kentucky 40202

REV #	DATE	DESCRIPTION
2	05-30-2013	Addendum#2: Added Notes/Akin, Splash Stone Dim. to H.W. Detail

Job No: 12300.4AC
Date: May 8, 2013
Scale:
Drawn By:
BID SET

Drawing Title:
Parklands of Floyds Fork
PROJECT 4A Loop Trail Details

Drawing No:
LT-C6.1

May, 30, 2013 – 10:51am
C:\Users\Tyler.Pitt-Wilson\Desktop\Temp\ArcPublish_48923\12300.4AC-DTL_LT.dwg (LT-C6.1)

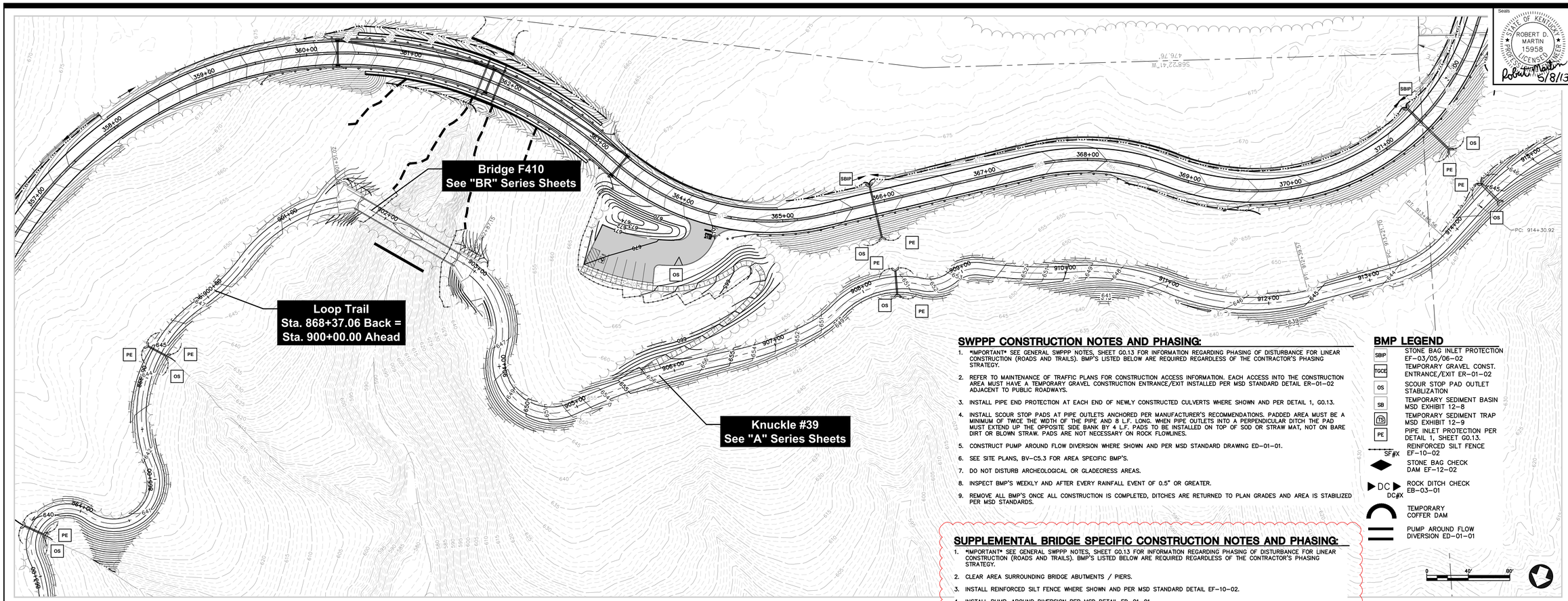

SWPPP CONSTRUCTION NOTES AND PHASING:

1. *IMPORTANT* SEE GENERAL SWPPP NOTES, SHEET G0.13 FOR INFORMATION REGARDING PHASING OF DISTURBANCE FOR LINEAR CONSTRUCTION (ROADS AND TRAILS). BMP'S LISTED BELOW ARE REQUIRED REGARDLESS OF THE CONTRACTOR'S PHASING STRATEGY.
2. REFER TO MAINTENANCE OF TRAFFIC PLANS FOR CONSTRUCTION ACCESS INFORMATION. EACH ACCESS INTO THE CONSTRUCTION AREA MUST HAVE A TEMPORARY GRAVEL CONSTRUCTION ENTRANCE/EXIT INSTALLED PER MSD STANDARD DETAIL ER-01-02 ADJACENT TO PUBLIC ROADWAYS.
3. INSTALL PIPE END PROTECTION AT EACH END OF NEWLY CONSTRUCTED CULVERTS WHERE SHOWN AND PER DETAIL 1, G0.13.
4. INSTALL SCOUR STOP PADS AT PIPE OUTLETS ANCHORED PER MANUFACTURER'S RECOMMENDATIONS. PADDED AREA MUST BE A MINIMUM OF TWICE THE WIDTH OF THE PIPE AND 8 L.F. LONG. WHEN PIPE OUTLETS INTO A PERPENDICULAR DITCH THE PAD MUST EXTEND UP THE OPPOSITE SIDE BANK BY 4 L.F. PADS TO BE INSTALLED ON TOP OF SOD OR STRAW MAT, NOT ON BARE DIRT OR BLOWN STRAW. PADS ARE NOT NECESSARY ON ROCK FLOWLINES.
5. CONSTRUCT PUMP AROUND FLOW DIVERSION WHERE SHOWN AND PER MSD STANDARD DRAWING ED-01-01.
6. SEE SITE PLANS, BV-C5.3 FOR AREA SPECIFIC BMP'S.
7. DO NOT DISTURB ARCHEOLOGICAL OR GLADECRESS AREAS.
8. INSPECT BMP'S WEEKLY AND AFTER EVERY RAINFALL EVENT OF 0.5" OR GREATER.
9. REMOVE ALL BMP'S ONCE ALL CONSTRUCTION IS COMPLETED, DITCHES ARE RETURNED TO PLAN GRADES AND AREA IS STABILIZED PER MSD STANDARDS.

BMP LEGEND

- SBIP — STONE BAG INLET PROTECTION EF-03/05/06-02
- TGCE — TEMPORARY GRAVEL CONST. ENTRANCE/EXIT ER-01-02
- OS — SCOUR STOP PAD OUTLET STABILIZATION
- SB — TEMPORARY SEDIMENT BASIN MSD EXHIBIT 12-8
- TSB — TEMPORARY SEDIMENT TRAP MSD EXHIBIT 12-9
- PE — PIPE INLET PROTECTION PER DETAIL 1, SHEET G0.13.
- SF#X — REINFORCED SILT FENCE EF-10-02
- STONE BAG CHECK DAM EF-12-02
- DC / DC#X — ROCK DITCH CHECK EB-03-01
- TEMPORARY COFFER DAM
- PUMP AROUND FLOW DIVERSION ED-01-01

SUPPLEMENTAL BRIDGE SPECIFIC CONSTRUCTION NOTES AND PHASING:

1. *IMPORTANT* SEE GENERAL SWPPP NOTES, SHEET G0.13 FOR INFORMATION REGARDING PHASING OF DISTURBANCE FOR LINEAR CONSTRUCTION (ROADS AND TRAILS). BMP'S LISTED BELOW ARE REQUIRED REGARDLESS OF THE CONTRACTOR'S PHASING STRATEGY.
2. CLEAR AREA SURROUNDING BRIDGE ABUTMENTS / PIERS.
3. INSTALL REINFORCED SILT FENCE WHERE SHOWN AND PER MSD STANDARD DETAIL EF-10-02.
4. INSTALL PUMP-AROUND DIVERSION PER MSD DETAIL ED-01-01.
5. PERFORM ROUGH GRADING OPERATIONS AT ABUTMENTS WHILE KEEPING THE DISTURBED LIMITS TO AN ABSOLUTE MINIMUM.
6. IF ROUGH GRADED AREA AROUND ABUTMENTS / PIERS REMAIN IN A STATE WHERE THE PERMANENT BIOENGINEERING STABILIZATION MEASURES CANNOT BE INSTALLED WITHIN 14 DAYS OF CONSTRUCTION ACTIVITIES, THEN THE CONTRACTOR MUST TEMPORARILY SEED AND STRAW DISTURBED AREAS. HOWEVER THE CONTRACTOR SHALL BE REQUIRED TO INSTALL THE PERMANENT BIOENGINEERING STABILIZATION MEASURES AS SOON AS IT IS PRACTICE TO DO SO.
6. CONSTRUCT ABUTMENTS / PIERS / ERECT BRIDGE
7. FINAL GRADE DISTURBED AREAS
8. INSTALL PERMANENT BIOENGINEERING STABILIZATION MEASURES AS DETAILED IN BR SERIES SHEETS.
9. DO NOT DISTURB ARCHEOLOGICAL OR GLADECRESS AREAS.
10. INSPECT BMP'S WEEKLY AND AFTER EVERY RAINFALL EVENT OF 0.5" OR GREATER.
11. REMOVE ALL BMP'S ONCE ALL CONSTRUCTION IS COMPLETED, DITCHES ARE RETURNED TO PLAN GRADES AND AREA IS STABILIZED PER MSD STANDARDS.

0 40' 80'

Seals

STATE OF KENTUCKY
ROBERT D. MARTIN
15958
PROFESSIONAL ENGINEER
5/8/13

Engineering
Planning
QK4
1046 East Chestnut Street, Louisville, Kentucky 40204
Phone: 502-585-2222 Internet: www.qk4.com
Kentucky • Indiana • Georgia • Tennessee • Florida

LANDSCAPE ARCHITECT
WRT
Wallace Roberts & Todd, LLC
1700 Market Street
28th Floor
Philadelphia, PA 19103
tel 215.732.5215
fax 215.732.2551

Architect
BRAVURA
111 West Washington Street
Louisville, Kentucky 40202
P: (502) 584-9900
F: (502) 584-0029

The Parklands of Floyds Fork, Project 4A

The Strand, Turkey Run Park and Broad Run
Louisville, Kentucky

Owner:
21st Century Parks, Inc.
311 West Main St., Suite 202
Louisville, Kentucky 40202

REV #	DATE	DESCRIPTION
2	05.30.2013	Addendum#2 (MSD Comments)

Job No: 12300.4AC
Date: May 8, 2013
Scale: H 1" = 40' V 1" = 40'
Drawn By:

BID SET

Drawing Title:

Parklands of Floyds Fork

PROJECT 4A
Loop Trail
Grading Plans
Sta. 900+00 to 927+00

Drawing No:

LT-C2.22

May 31, 2013 - 4:57pm
C:\Users\Keller.PARK-NT\Documents\Vaces\Memp\ArProduction_34401\21CP4 LW-ROAD AND TRAIL GD-9.dwg (LT-C2.22)

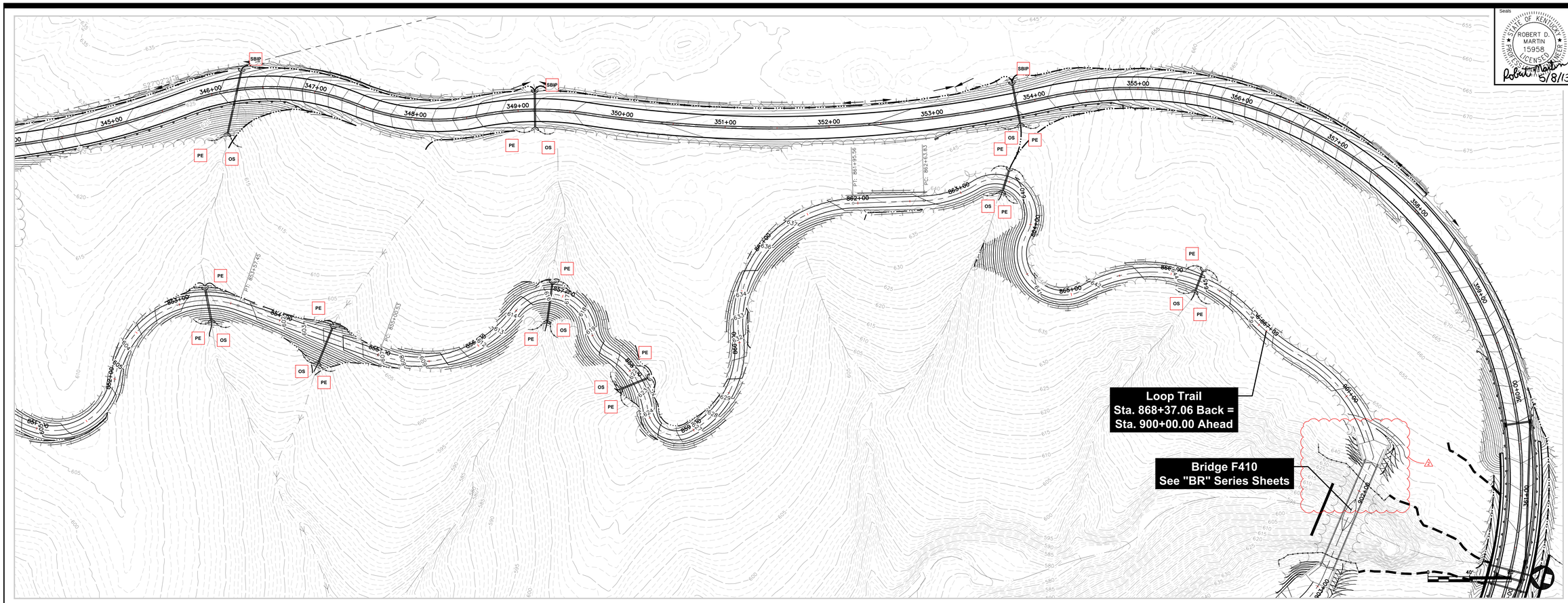

SWPPP CONSTRUCTION NOTES AND PHASING:

1. *IMPORTANT* SEE GENERAL SWPPP NOTES, SHEET GO.13 FOR INFORMATION REGARDING PHASING OF DISTURBANCE FOR LINEAR CONSTRUCTION (ROADS AND TRAILS). BMP'S LISTED BELOW ARE REQUIRED REGARDLESS OF THE CONTRACTOR'S PHASING STRATEGY.
2. REFER TO MAINTENANCE OF TRAFFIC PLANS FOR CONSTRUCTION ACCESS INFORMATION. EACH ACCESS INTO THE CONSTRUCTION AREA MUST HAVE A TEMPORARY GRAVEL CONSTRUCTION ENTRANCE/EXIT INSTALLED PER MSD STANDARD DETAIL ER-01-02 ADJACENT TO PUBLIC ROADWAYS.
3. INSTALL REINFORCED SILT FENCE WHERE SHOWN AND PER MSD STANDARD DETAIL EF-10-02.
4. INSTALL PIPE END PROTECTION AT EACH END OF NEWLY CONSTRUCTED CULVERTS WHERE SHOWN AND PER DETAIL 1, GO.13.
5. INSTALL SCOUR STOP PADS AT PIPE OUTLETS ANCHORED PER MANUFACTURER'S RECOMMENDATIONS. PADDED AREA MUST BE A MINIMUM OF TWICE THE WIDTH OF THE PIPE AND 8 L.F. LONG. WHEN PIPE OUTLETS INTO A PERPENDICULAR DITCH THE PAD MUST EXTEND UP THE OPPOSITE SIDE BANK BY 4 L.F. PADS TO BE INSTALLED ON TOP OF SOD OR STRAW MAT, NOT ON BARE DIRT OR BLOWN STRAW. PADS ARE NOT NECESSARY ON ROCK FLOWLINES.
6. CONSTRUCT PUMP AROUND FLOW DIVERSION WHERE SHOWN AND PER MSD STANDARD DRAWING ED-01-01.
7. DO NOT DISTURB ARCHEOLOGICAL OR GLADECRESS AREAS.
8. INSPECT BMP'S WEEKLY AND AFTER EVERY RAINFALL EVENT OF 0.5" OR GREATER.
9. REMOVE ALL BMP'S ONCE ALL CONSTRUCTION IS COMPLETED, DITCHES ARE RETURNED TO PLAN GRADES AND AREA IS STABILIZED PER MSD STANDARDS.

BMP LEGEND

- SBIP — STONE BAG INLET PROTECTION EF-03/05/06-02
- TGCE — TEMPORARY GRAVEL CONST. ENTRANCE/EXIT ER-01-02
- OS — SCOUR STOP PAD OUTLET STABLIZATION
- SB — TEMPORARY SEDIMENT BASIN MSD EXHIBIT 12-8
- TS — TEMPORARY SEDIMENT TRAP MSD EXHIBIT 12-9
- PE — PIPE INLET PROTECTION PER DETAIL 1, SHEET GO.13.
- SF#X — REINFORCED SILT FENCE EF-10-02
- STONE BAG CHECK DAM EF-12-02
- DC / DC#X — ROCK DITCH CHECK EB-03-01
- TEMPORARY COFFER DAM
- PUMP AROUND FLOW DIVERSION ED-01-01

Seals

STATE OF KENTUCKY — ROBERT D. MARTIN — 15958 — PROFESSIONAL ENGINEER — LICENSED — 5/8/13

Engineering
Planning

1048 East Chestnut Street, Louisville, Kentucky 40204
Phone: 502-585-2222 Internet: www.qk4.com
Kentucky • Indiana • Georgia • Tennessee • Florida

LANDSCAPE ARCHITECT

Wallace Roberts & Todd, LLC
1700 Market Street
28th Floor
Philadelphia, PA 19103
tel 215.732.5215
fax 215.732.2551

Architect

BRAVURA
111 West Washington Street
Louisville, Kentucky 40202
T: (502) 584-9900
F: (502) 584-0029

The Parklands of Floyds Fork, Project 4A

The Strand, Turkey Run Park and Broad Run
Louisville, Kentucky

Owner:
21st Century Parks, Inc.
371 W. Main St., Suite 202
Louisville, Kentucky 40202

REV #	DATE	DESCRIPTION
2	05-30-2013	Addendum #2, MSD comments

Job No: 12300.4AC
Date: May 8, 2013
Scale: H 1" = 40' V 1" = 40'
Drawn By:

BID SET

Drawing Title:

Parklands of Floyds Fork

PROJECT 4A
Loop Trail
Grading Plans
Sta. 855+00 to 868+40

Drawing No:

LT-C2.21

May 31, 2013 - 6:39pm
M:\12300.4AC - 21st Century Parks Phase 4A\SITE\Dwgs\Civil\21DP4 LW-ROAD AND TRAIL GD-8.dwg (LT-C2.21)

SWPPP CONSTRUCTION NOTES AND PHASING:

1. *IMPORTANT* SEE GENERAL SWPPP NOTES, SHEET G0.13 FOR INFORMATION REGARDING PHASING OF DISTURBANCE FOR LINEAR CONSTRUCTION (ROADS AND TRAILS). BMP'S LISTED BELOW ARE REQUIRED REGARDLESS OF THE CONTRACTOR'S PHASING STRATEGY.
2. REFER TO MAINTENANCE OF TRAFFIC PLANS FOR CONSTRUCTION ACCESS INFORMATION. EACH ACCESS INTO THE CONSTRUCTION AREA MUST HAVE A TEMPORARY GRAVEL CONSTRUCTION ENTRANCE/EXIT INSTALLED PER MSD STANDARD DETAIL ER-01-02 ADJACENT TO PUBLIC ROADWAYS.
3. INSTALL PIPE END PROTECTION AT EACH END OF NEWLY CONSTRUCTED CULVERTS WHERE SHOWN AND PER DETAIL 1, G0.13.
4. INSTALL SCOUR STOP PADS AT PIPE OUTLETS ANCHORED PER MANUFACTURER'S RECOMMENDATIONS. PADDED AREA MUST BE A MINIMUM OF TWICE THE WIDTH OF THE PIPE AND 8 L.F. LONG. WHEN PIPE OUTLETS INTO A PERPENDICULAR DITCH THE PAD MUST EXTEND UP THE OPPOSITE SIDE BANK BY 4 L.F. PADS TO BE INSTALLED ON TOP OF SOD OR STRAW MAT, NOT ON BARE DIRT OR BLOWN STRAW. PADS ARE NOT NECESSARY ON ROCK FLOWLINES.
5. INSTALL STONE BAG INLET PROTECTION AT INLET HEADWALLS AND CATCH BASINS AS SHOWN AND PER MSD STANDARD DRAWINGS, EF-03-02, EF-05-02 AND EF-06-02. STONE BAGS ARE NOT PERMITTED TO BE PLACED WHERE PIPES ARE CONSTRUCTED IN EXISTING DRAWS.
6. DO NOT DISTURB ARCHEOLOGICAL OR GLADECRESS AREAS.
7. INSPECT BMP'S WEEKLY AND AFTER EVERY RAINFALL EVENT OF 0.5" OR GREATER.
8. REMOVE ALL BMP'S ONCE ALL CONSTRUCTION IS COMPLETED, DITCHES ARE RETURNED TO PLAN GRADES AND AREA IS STABILIZED PER MSD STANDARDS.

BMP LEGEND

SBIP	STONE BAG INLET PROTECTION EF-03/05/06-02
TGCE	TEMPORARY GRAVEL CONST. ENTRANCE/EXIT ER-01-02
OS	SCOUR STOP PAD OUTLET STABLIZATION
SB	TEMPORARY SEDIMENT BASIN MSD EXHIBIT 12-8
TS	TEMPORARY SEDIMENT TRAP MSD EXHIBIT 12-9
PE	PIPE INLET PROTECTION PER DETAIL 1, SHEET G0.13.
SF#X	REINFORCED SILT FENCE EF-10-02
	STONE BAG CHECK DAM EF-12-02
DC DC#X	ROCK DITCH CHECK EB-03-01
	TEMPORARY COFFER DAM
	PUMP AROUND FLOW DIVERSION ED-01-01

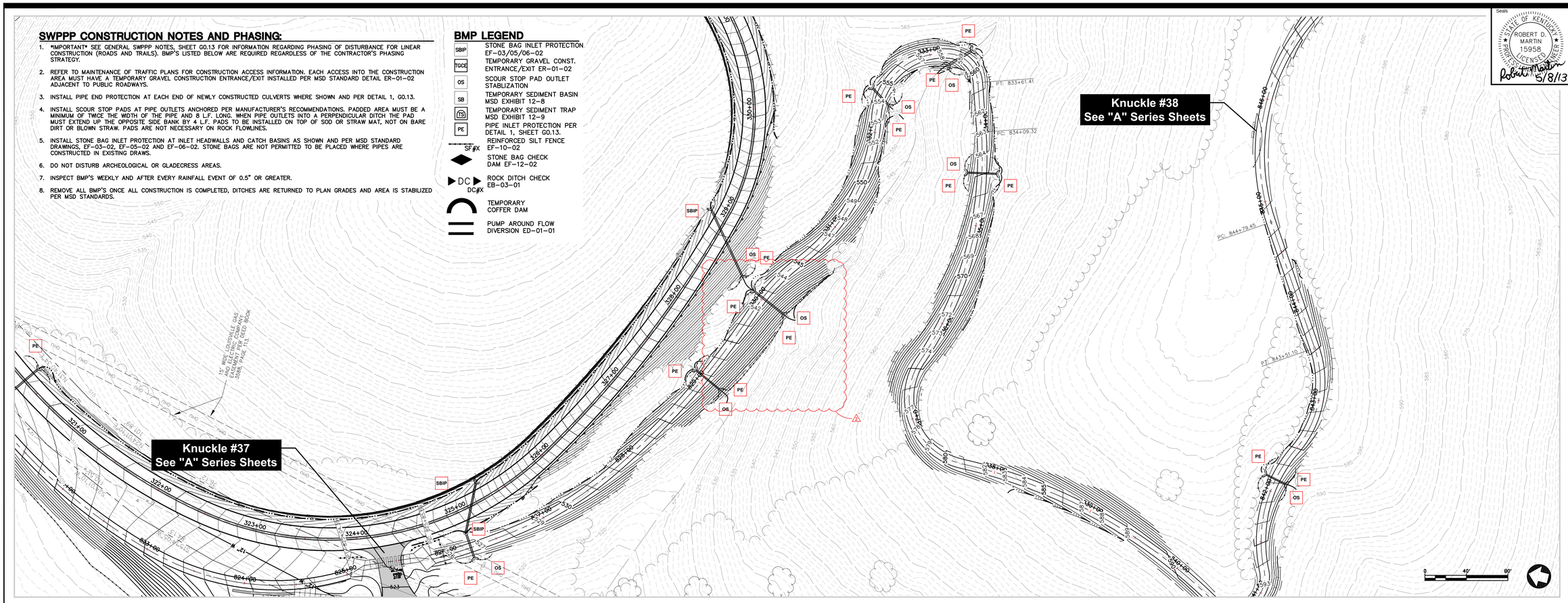

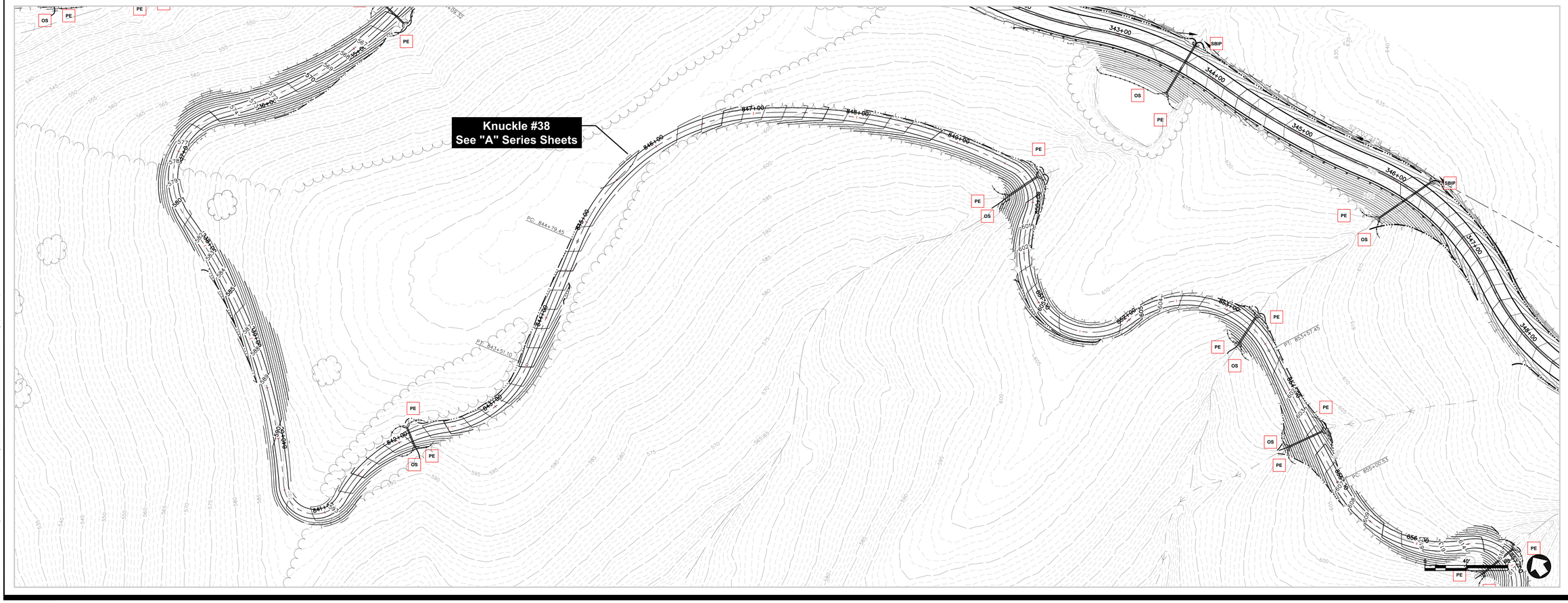

Seals

STATE OF KENTUCKY
ROBERT D. MARTIN
15958
LICENSED
PROFESSIONAL ENGINEER
Robert D. Martin
5/8/13

Engineering
Planning

1046 East Chestnut Street, Louisville, Kentucky 40204
Phone: 502-585-2222 Internet: www.qk4.com
Kentucky • Indiana • Georgia • Tennessee • Florida

LANDSCAPE ARCHITECT

WRT

Wallace Roberts & Todd, LLC
1700 Market Street
28th Floor
Philadelphia, PA 19103
tel 215.732.5215
fax 215.732.2551

Architect

BRAVURA
111 West Washington Street
Louisville, Kentucky 40202
T: (502) 584-9900
F: (502) 584-0829

The Parklands of Floyds Fork, Project 4A

The Strand, Turkey Run Park and Broad Run
Louisville, Kentucky

Owner:
21st Century Parks, Inc.
371 W. Main St., Suite 202
Louisville, Kentucky 40202

REV #	DATE	DESCRIPTION
2	05-30-2013	Addendum #2: MSD comments

Job No:	12300.4AC
Date:	May 8, 2013
Scale:	H 1" = 40' V 1" = 40'
Drawn By:	

BID SET

Drawing Title:

Parklands of Floyds Fork

PROJECT 4A
Loop Trail
Grading Plans
Sta. 827+00 to 855+00

Drawing No:

LT-C2.20

May 31, 2013 - 6:38pm
U:\12300.4AC - 21st Century Parks Phase 4A\SITE\Dwgs\CDoc\21CP4 LW-ROAD AND TRAIL GD-8.dwg (LT-C2.20)

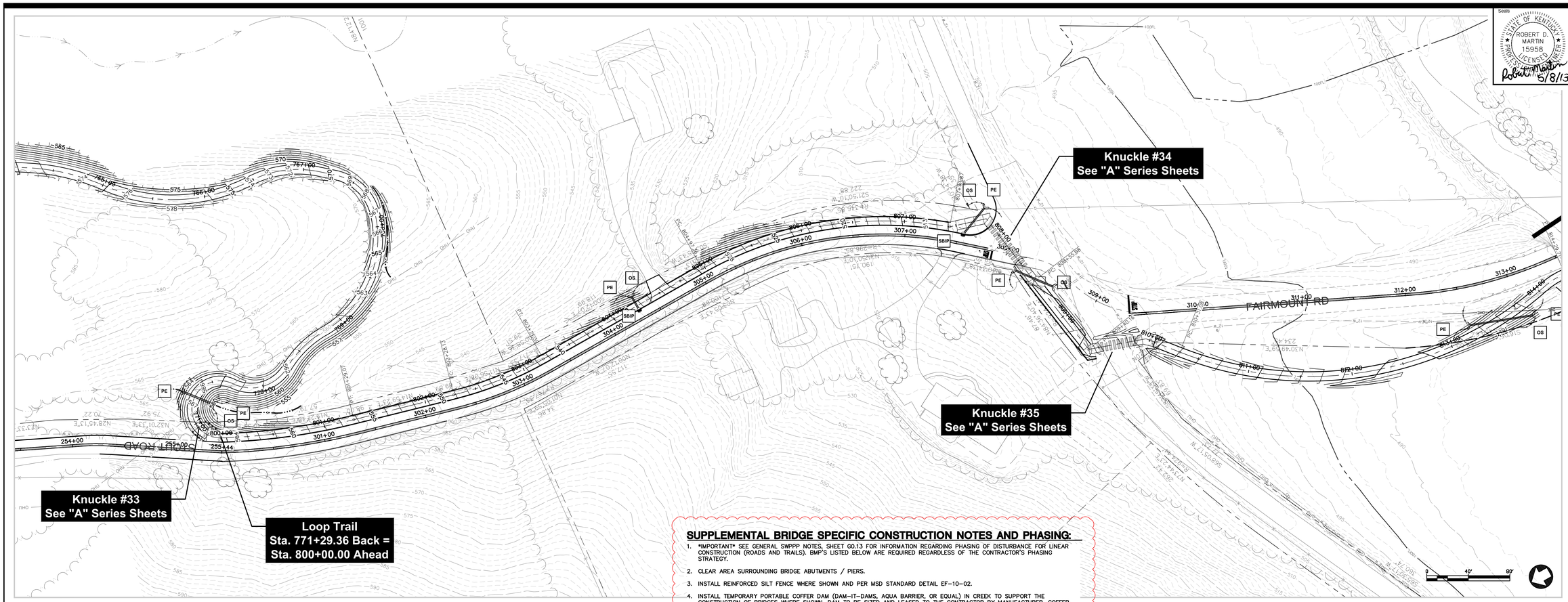

SUPPLEMENTAL BRIDGE SPECIFIC CONSTRUCTION NOTES AND PHASING:

1. *IMPORTANT* SEE GENERAL SWPPP NOTES, SHEET G0.13 FOR INFORMATION REGARDING PHASING OF DISTURBANCE FOR LINEAR CONSTRUCTION (ROADS AND TRAILS). BMP'S LISTED BELOW ARE REQUIRED REGARDLESS OF THE CONTRACTOR'S PHASING STRATEGY.
2. CLEAR AREA SURROUNDING BRIDGE ABUTMENTS / PIERS.
3. INSTALL REINFORCED SILT FENCE WHERE SHOWN AND PER MSD STANDARD DETAIL EF-10-02.
4. INSTALL TEMPORARY PORTABLE COFFER DAM (DAM-IT-DAMS, AQUA BARRIER, OR EQUAL) IN CREEK TO SUPPORT THE CONSTRUCTION OF BRIDGES WHERE SHOWN. DAM TO BE SIZED AND LEASED TO THE CONTRACTOR BY MANUFACTURER. COFFER DAMS MAY NOT BE NECESSARY FOR CONSTRUCTION DEPENDING ON WATER LEVEL AT TIME OF CONSTRUCTION. IF THEY ARE DEEMED NOT NECESSARY, ALTERNATIVE MEANS OF PROTECTING THE CREEK MUST BE APPROVED BY MSD. COFFER DAM AREA TO BE DEWATERED BY PUMPING THROUGH A FILTER BAG TO A VEGETATED AREA AT LEAST 100' FROM THE STREAM.
5. PERFORM ROUGH GRADING OPERATIONS AT ABUTMENTS WHILE KEEPING THE DISTURBED LIMITS TO AN ABSOLUTE MINIMUM.
6. IF ROUGH GRADED AREA AROUND ABUTMENTS / PIERS REMAIN IN A STATE WHERE THE PERMANENT BIOENGINEERING STABILIZATION MEASURES CANNOT BE INSTALLED WITHIN 14 DAYS OF CONSTRUCTION ACTIVITIES, THEN THE CONTRACTOR MUST TEMPORARILY SEED AND STRAW DISTURBED AREAS. HOWEVER THE CONTRACTOR SHALL BE REQUIRED TO INSTALL THE PERMANENT BIOENGINEERING STABILIZATION MEASURES AS SOON AS IT IS PRACTICE TO DO SO.
6. CONSTRUCT ABUTMENTS / PIERS / ERECT BRIDGE
7. FINAL GRADE DISTURBED AREAS
8. INSTALL PERMANENT BIOENGINEERING STABILIZATION MEASURES AS DETAILED IN BR SERIES SHEETS.
9. DO NOT DISTURB ARCHEOLOGICAL OR GLADECRESS AREAS.
10. INSPECT BMP'S WEEKLY AND AFTER EVERY RAINFALL EVENT OF 0.5" OR GREATER.
11. REMOVE ALL BMP'S ONCE ALL CONSTRUCTION IS COMPLETED, DITCHES ARE RETURNED TO PLAN GRADES AND AREA IS STABILIZED PER MSD STANDARDS.

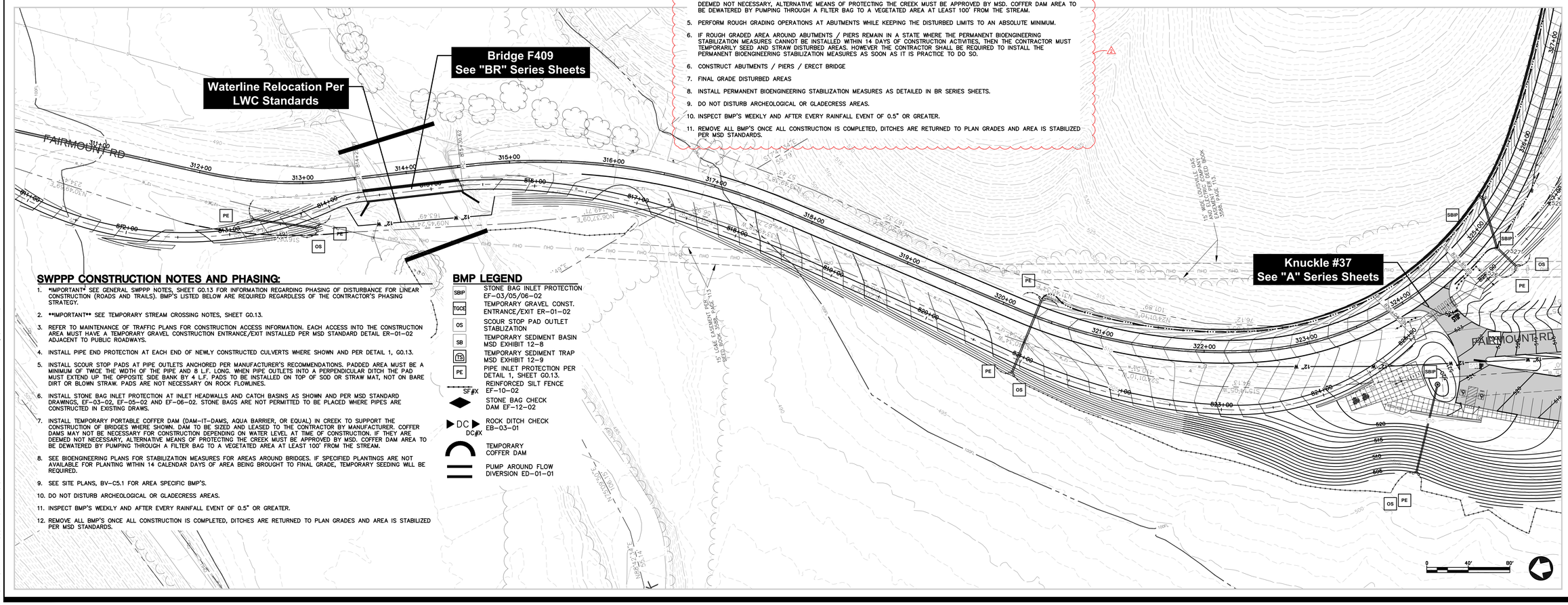

SWPPP CONSTRUCTION NOTES AND PHASING:

1. *IMPORTANT* SEE GENERAL SWPPP NOTES, SHEET G0.13 FOR INFORMATION REGARDING PHASING OF DISTURBANCE FOR LINEAR CONSTRUCTION (ROADS AND TRAILS). BMP'S LISTED BELOW ARE REQUIRED REGARDLESS OF THE CONTRACTOR'S PHASING STRATEGY.
2. **IMPORTANT** SEE TEMPORARY STREAM CROSSING NOTES, SHEET G0.13.
3. REFER TO MAINTENANCE OF TRAFFIC PLANS FOR CONSTRUCTION ACCESS INFORMATION. EACH ACCESS INTO THE CONSTRUCTION AREA MUST HAVE A TEMPORARY GRAVEL CONSTRUCTION ENTRANCE/EXIT INSTALLED PER MSD STANDARD DETAIL ER-01-02 ADJACENT TO PUBLIC ROADWAYS.
4. INSTALL PIPE END PROTECTION AT EACH END OF NEWLY CONSTRUCTED CULVERTS WHERE SHOWN AND PER DETAIL 1, G0.13.
5. INSTALL SCOUR STOP PADS AT PIPE OUTLETS ANCHORED PER MANUFACTURER'S RECOMMENDATIONS. PADDED AREA MUST BE A MINIMUM OF TWICE THE WIDTH OF THE PIPE AND 8 L.F. LONG. WHEN PIPE OUTLETS INTO A PERPENDICULAR DITCH THE PAD MUST EXTEND UP THE OPPOSITE SIDE BANK BY 4 L.F. PADS TO BE INSTALLED ON TOP OF SOD OR STRAW MAT, NOT ON BARE DIRT OR BLOWN STRAW. PADS ARE NOT NECESSARY ON ROCK FLOWLINES.
6. INSTALL STONE BAG INLET PROTECTION AT INLET HEADWALLS AND CATCH BASINS AS SHOWN AND PER MSD STANDARD DRAWINGS, EF-03-02, EF-05-02 AND EF-06-02. STONE BAGS ARE NOT PERMITTED TO BE PLACED WHERE PIPES ARE CONSTRUCTED IN EXISTING DRAWS.
7. INSTALL TEMPORARY PORTABLE COFFER DAM (DAM-IT-DAMS, AQUA BARRIER, OR EQUAL) IN CREEK TO SUPPORT THE CONSTRUCTION OF BRIDGES WHERE SHOWN. DAM TO BE SIZED AND LEASED TO THE CONTRACTOR BY MANUFACTURER. COFFER DAMS MAY NOT BE NECESSARY FOR CONSTRUCTION DEPENDING ON WATER LEVEL AT TIME OF CONSTRUCTION. IF THEY ARE DEEMED NOT NECESSARY, ALTERNATIVE MEANS OF PROTECTING THE CREEK MUST BE APPROVED BY MSD. COFFER DAM AREA TO BE DEWATERED BY PUMPING THROUGH A FILTER BAG TO A VEGETATED AREA AT LEAST 100' FROM THE STREAM.
8. SEE BIOENGINEERING PLANS FOR STABILIZATION MEASURES FOR AREAS AROUND BRIDGES. IF SPECIFIED PLANTINGS ARE NOT AVAILABLE FOR PLANTING WITHIN 14 CALENDAR DAYS OF AREA BEING BROUGHT TO FINAL GRADE, TEMPORARY SEEDING WILL BE REQUIRED.
9. SEE SITE PLANS, BV-C5.1 FOR AREA SPECIFIC BMP'S.
10. DO NOT DISTURB ARCHEOLOGICAL OR GLADECRESS AREAS.
11. INSPECT BMP'S WEEKLY AND AFTER EVERY RAINFALL EVENT OF 0.5" OR GREATER.
12. REMOVE ALL BMP'S ONCE ALL CONSTRUCTION IS COMPLETED, DITCHES ARE RETURNED TO PLAN GRADES AND AREA IS STABILIZED PER MSD STANDARDS.

BMP LEGEND

SBIP	STONE BAG INLET PROTECTION EF-03/05/06-02
TGCE	TEMPORARY GRAVEL CONST. ENTRANCE/EXIT ER-01-02
OS	SCOUR STOP PAD OUTLET STABLIZATION
SB	TEMPORARY SEDIMENT BASIN MSD EXHIBIT 12-8
TS	TEMPORARY SEDIMENT TRAP MSD EXHIBIT 12-9
PE	PIPE INLET PROTECTION PER DETAIL 1, SHEET G0.13.
SF#X	REINFORCED SILT FENCE EF-10-02
	STONE BAG CHECK DAM EF-12-02
DC / DC#X	ROCK DITCH CHECK EB-03-01
	TEMPORARY COFFER DAM
	PUMP AROUND FLOW DIVERSION ED-01-01

Seals

STATE OF KENTUCKY
ROBERT D. MARTIN
15958
PROFESSIONAL ENGINEER
5/8/13

Engineering
Planning

1046 East Chestnut Street, Louisville, Kentucky 40204
Phone: 502-585-2222 Internet: www.qk4.com
Kentucky • Indiana • Georgia • Tennessee • Florida

LANDSCAPE ARCHITECT

Wallace Roberts & Todd, LLC
1700 Market Street
28th Floor
Philadelphia, PA 19103
tel 215.732.5215
fax 215.732.2551

Architect

BRAVURA
111 West Washington Street
Louisville, Kentucky 40202
T: (502) 584-9900
F: (502) 584-0029

The Parklands of Floyds Fork, Project 4A

The Strand, Turkey Run Park and Broad Run
Louisville, Kentucky

Owner:
21st Century Parks, Inc.
371 W. Main St., Suite 202
Louisville, Kentucky 40202

REV #	DATE	DESCRIPTION
2	05.30.2013	Addendum2, MSD Comments

Job No:	12300.4AC
Date:	May 8, 2013
Scale:	H 1" = 40' V 1" = 40'
Drawn By:	

BID SET

Drawing Title:

Parklands of
Floyds Fork

PROJECT 4A
Loop Trail
Grading Plans
Sta. 800+00 to 827+00

Drawing No:

LT-C2.19

May 31, 2013 - 5:05pm
C:\Users\User.PA-NT\Desktop\Work\Temp\AcPublish_3440\12104 LW-ROAD AND TRAIL GD-8.dwg (LT-C2.19)

SUPPLEMENTAL BRIDGE SPECIFIC CONSTRUCTION NOTES AND PHASING:

1. *IMPORTANT* SEE GENERAL SWPPP NOTES, SHEET G0.13 FOR INFORMATION REGARDING PHASING OF DISTURBANCE FOR LINEAR CONSTRUCTION (ROADS AND TRAILS). BMP'S LISTED BELOW ARE REQUIRED REGARDLESS OF THE CONTRACTOR'S PHASING STRATEGY.
2. CLEAR AREA SURROUNDING BRIDGE ABUTMENTS / PIERS.
3. INSTALL REINFORCED SILT FENCE WHERE SHOWN AND PER MSD STANDARD DETAIL EF-10-02.
4. INSTALL PUMP-AROUND DIVERSION PER MSD DETAIL ED-01-01.
5. PERFORM ROUGH GRADING OPERATIONS AT ABUTMENTS WHILE KEEPING THE DISTURBED LIMITS TO AN ABSOLUTE MINIMUM.
6. IF ROUGH GRADED AREA AROUND ABUTMENTS / PIERS REMAIN IN A STATE WHERE THE PERMANENT BIOENGINEERING STABILIZATION MEASURES CANNOT BE INSTALLED WITHIN 14 DAYS OF CONSTRUCTION ACTIVITIES, THEN THE CONTRACTOR MUST TEMPORARILY SEED AND STRAW DISTURBED AREAS. HOWEVER THE CONTRACTOR SHALL BE REQUIRED TO INSTALL THE PERMANENT BIOENGINEERING STABILIZATION MEASURES AS SOON AS IT IS PRACTICE TO DO SO.
6. CONSTRUCT ABUTMENTS / PIERS / ERECT BRIDGE
7. FINAL GRADE DISTURBED AREAS
8. INSTALL PERMANENT BIOENGINEERING STABILIZATION MEASURES AS DETAILED IN BR SERIES SHEETS.
9. DO NOT DISTURB ARCHEOLOGICAL OR GLADECRESS AREAS.
10. INSPECT BMP'S WEEKLY AND AFTER EVERY RAINFALL EVENT OF 0.5" OR GREATER.
11. REMOVE ALL BMP'S ONCE ALL CONSTRUCTION IS COMPLETED, DITCHES ARE RETURNED TO PLAN GRADES AND AREA IS STABILIZED PER MSD STANDARDS.

Bridge F408A
See "BR" Series Sheets

Loop Trail
Sta. 652+59.05 Back =
Sta. 700+00.00 Ahead

Knuckle #25
See "A" Series Sheets

Bridge F408
See "BR" Series Sheets

SWPPP CONSTRUCTION NOTES AND PHASING:

1. *IMPORTANT* SEE GENERAL SWPPP NOTES, SHEET G0.13 FOR INFORMATION REGARDING PHASING OF DISTURBANCE FOR LINEAR CONSTRUCTION (ROADS AND TRAILS). BMP'S LISTED BELOW ARE REQUIRED REGARDLESS OF THE CONTRACTOR'S PHASING STRATEGY.
2. REFER TO MAINTENANCE OF TRAFFIC PLANS FOR CONSTRUCTION ACCESS INFORMATION. EACH ACCESS INTO THE CONSTRUCTION AREA MUST HAVE A TEMPORARY GRAVEL CONSTRUCTION ENTRANCE/EXIT INSTALLED PER MSD STANDARD DETAIL ER-01-02 ADJACENT TO PUBLIC ROADWAYS.
3. INSTALL REINFORCED SILT FENCE WHERE SHOWN AND PER MSD STANDARD DETAIL EF-10-02.
4. INSTALL PIPE END PROTECTION AT EACH END OF NEWLY CONSTRUCTED CULVERTS WHERE SHOWN AND PER DETAIL 1, G0.13.
5. INSTALL SCOUR STOP PADS AT PIPE OUTLETS ANCHORED PER MANUFACTURER'S RECOMMENDATIONS. PADDED AREA MUST BE A MINIMUM OF TWICE THE WIDTH OF THE PIPE AND 8 L.F. LONG. WHEN PIPE OUTLETS INTO A PERPENDICULAR DITCH THE PAD MUST EXTEND UP THE OPPOSITE SIDE BANK BY 4 L.F. PADS TO BE INSTALLED ON TOP OF SOD OR STRAW MAT, NOT ON BARE DIRT OR BLOWN STRAW. PADS ARE NOT NECESSARY ON ROCK FLOWLINES.
6. CONSTRUCT PUMP AROUND FLOW DIVERSION WHERE SHOWN AND PER MSD STANDARD DRAWING ED-01-01.
7. DO NOT DISTURB ARCHEOLOGICAL OR GLADECRESS AREAS.
8. INSPECT BMP'S WEEKLY AND AFTER EVERY RAINFALL EVENT OF 0.5" OR GREATER.
9. REMOVE ALL BMP'S ONCE ALL CONSTRUCTION IS COMPLETED, DITCHES ARE RETURNED TO PLAN GRADES AND AREA IS STABILIZED PER MSD STANDARDS.

BMP LEGEND

SBIP	STONE BAG INLET PROTECTION EF-03/05/06-02
TGCE	TEMPORARY GRAVEL CONST. ENTRANCE/EXIT ER-01-02
OS	SCOUR STOP PAD OUTLET STABLIZATION
SB	TEMPORARY SEDIMENT BASIN MSD EXHIBIT 12-8
TS	TEMPORARY SEDIMENT TRAP MSD EXHIBIT 12-9
PE	PIPE INLET PROTECTION PER DETAIL 1, SHEET G0.13.
SF#X	REINFORCED SILT FENCE EF-10-02
	STONE BAG CHECK DAM EF-12-02
DC DC#X	ROCK DITCH CHECK EB-03-01
	TEMPORARY COFFER DAM
	PUMP AROUND FLOW DIVERSION ED-01-01

0 40' 80'

Seals

STATE OF KENTUCKY
ROBERT D. MARTIN
15958
PROFESSIONAL ENGINEER
LICENSED
5/8/13

Engineering
Planning

1046 East Chestnut Street, Louisville, Kentucky 40204
Phone: 502-585-2222 Internet: www.qk4.com
Kentucky • Indiana • Georgia • Tennessee • Florida

LANDSCAPE ARCHITECT
Wallace Roberts & Todd, LLC
1700 Market Street
28th Floor
Philadelphia, PA 19103
tel 215.732.5215
fax 215.732.2551

Architect
BRAVURA
111 West Washington Street
Louisville, Kentucky 40202
T: (502) 584-9900
F: (502) 584-0929

The Parklands of Floyds Fork, Project 4A

The Strand, Turkey Run Park and Broad Run
Louisville, Kentucky

Owner:
21st Century Parks, Inc.
311 W. Main St., Suite 202
Louisville, Kentucky 40202

REV/#	DATE	DESCRIPTION
2	05-30-2013	Addendum2, MSD comments

Job No: 12300.4AC
Date: May 8, 2013
Scale: H 1" = 40' V 1" = 40'
Drawn By:

BID SET

Drawing Title:

Parklands of
Floyds Fork

PROJECT 4A
Loop Trail
Grading Plans
Sta. 700+00 to 727+00

Drawing No:

LT-C2.16

May 31, 2013 - 5:42pm
M:\12300.4AC - 21st Century Parks Phase 4A\SITE\Drwgs\Civil\12PP4 LW-ROAD AND TRAIL GD-13.dwg (LT-C2.16)



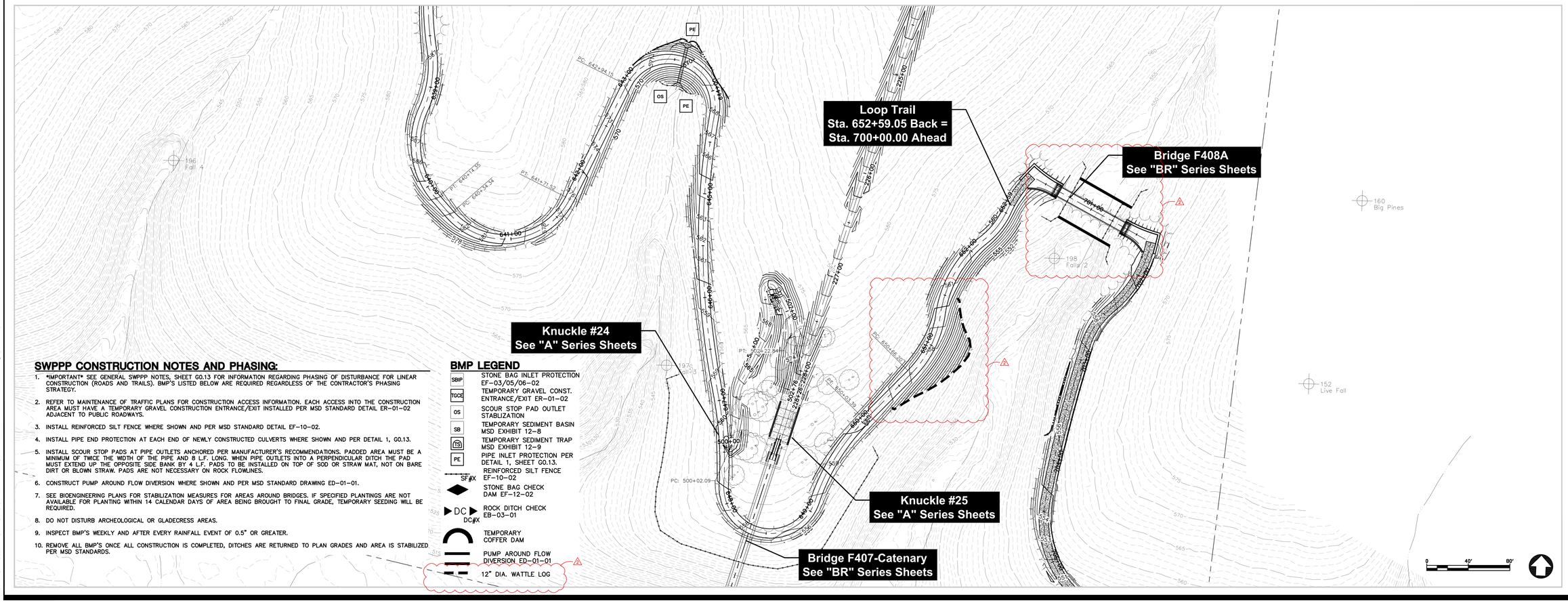

SWPPP CONSTRUCTION NOTES AND PHASING:

1. *IMPORTANT* SEE GENERAL SWPPP NOTES, SHEET G0.13 FOR INFORMATION REGARDING PHASING OF DISTURBANCE FOR LINEAR CONSTRUCTION (ROADS AND TRAILS). BMP'S LISTED BELOW ARE REQUIRED REGARDLESS OF THE CONTRACTOR'S PHASING STRATEGY.
2. REFER TO MAINTENANCE OF TRAFFIC PLANS FOR CONSTRUCTION ACCESS INFORMATION. EACH ACCESS INTO THE CONSTRUCTION AREA MUST HAVE A TEMPORARY GRAVEL CONSTRUCTION ENTRANCE/EXIT INSTALLED PER MSD STANDARD DETAIL ER-01-02 ADJACENT TO PUBLIC ROADWAYS.
3. INSTALL REINFORCED SILT FENCE WHERE SHOWN AND PER MSD STANDARD DETAIL EF-10-02.
4. INSTALL PIPE END PROTECTION AT EACH END OF NEWLY CONSTRUCTED CULVERTS WHERE SHOWN AND PER DETAIL 1, G0.13.
5. INSTALL SCOUR STOP PADS AT PIPE OUTLETS ANCHORED PER MANUFACTURER'S RECOMMENDATIONS. PADDED AREA MUST BE A MINIMUM OF TWICE THE WIDTH OF THE PIPE AND 8 L.F. LONG. WHEN PIPE OUTLETS INTO A PERPENDICULAR DITCH THE PAD MUST EXTEND UP THE OPPOSITE SIDE BANK BY 4 L.F. PADS TO BE INSTALLED ON TOP OF SOD OR STRAW MAT, NOT ON BARE DIRT OR BLOWN STRAW. PADS ARE NOT NECESSARY ON ROCK FLOWLINES.
6. CONSTRUCT PUMP AROUND FLOW DIVERSION WHERE SHOWN AND PER MSD STANDARD DRAWING ED-01-01.
7. SEE BIOENGINEERING PLANS FOR STABILIZATION MEASURES FOR AREAS AROUND BRIDGES. IF SPECIFIED PLANTINGS ARE NOT AVAILABLE FOR PLANTING WITHIN 14 CALENDAR DAYS OF AREA BEING BROUGHT TO FINAL GRADE, TEMPORARY SEEDING WILL BE REQUIRED.
8. DO NOT DISTURB ARCHEOLOGICAL OR GLADECRESS AREAS.
9. INSPECT BMP'S WEEKLY AND AFTER EVERY RAINFALL EVENT OF 0.5" OR GREATER.
10. REMOVE ALL BMP'S ONCE ALL CONSTRUCTION IS COMPLETED, DITCHES ARE RETURNED TO PLAN GRADES AND AREA IS STABILIZED PER MSD STANDARDS.

BMP LEGEND

SBIP	STONE BAG INLET PROTECTION EF-03/05/06-02
TGCE	TEMPORARY GRAVEL CONST. ENTRANCE/EXIT ER-01-02
OS	SCOUR STOP PAD OUTLET STABLIZATION
SB	TEMPORARY SEDIMENT BASIN MSD EXHIBIT 12-8
TS	TEMPORARY SEDIMENT TRAP MSD EXHIBIT 12-9
PE	PIPE INLET PROTECTION PER DETAIL 1, SHEET G0.13.
SF#X	REINFORCED SILT FENCE EF-10-02
	STONE BAG CHECK DAM EF-12-02
DC DC#X	ROCK DITCH CHECK EB-03-01
	TEMPORARY COFFER DAM
	PUMP AROUND FLOW DIVERSION ED-01-01
	12" DIA. WATTLE LOG

Seals

STATE OF KENTUCKY
ROBERT D. MARTIN
15958
PROFESSIONAL ENGINEER
LICENSED
5/8/13

Engineering
Planning

1046 East Chestnut Street, Louisville, Kentucky 40204
Phone: 502-585-2222 Internet: www.qk4.com
Kentucky • Indiana • Georgia • Tennessee • Florida

LANDSCAPE ARCHITECT

Wallace Roberts & Todd, LLC
1700 Market Street
28th Floor
Philadelphia, PA 19103
tel 215.732.5215
fax 215.732.2551

Architect

BRAVURA
111 West Washington Street
Louisville, Kentucky 40202
T: (502) 584-9900
F: (502) 584-0829

The Parklands of Floyds Fork, Project 4A

The Strand, Turkey Run Park and Broad Run
Louisville, Kentucky

Owner:
21st Century Parks, Inc.
371 W. Main St., Suite 202
Louisville, Kentucky 40202

REV #	DATE	DESCRIPTION
2	05-30-2013	Addendum #2, MSD comments

Job No: 12300.4AC
Date: May 8, 2013
Scale: H 1" = 40' V 1" = 40'
Drawn By:

BID SET

Drawing Title:

Parklands of Floyds Fork

PROJECT 4A
Loop Trail
Grading Plans
Sta. 627+00 to 652+63

Drawing No:

LT-C2.15

May 31, 2013 - 5:08pm
C:\Users\Vince Oppedisano\Documents\AcadPublish_5108\2104 LIN-ROAD AND TRAIL GD-12.dwg (LT-C2.15)

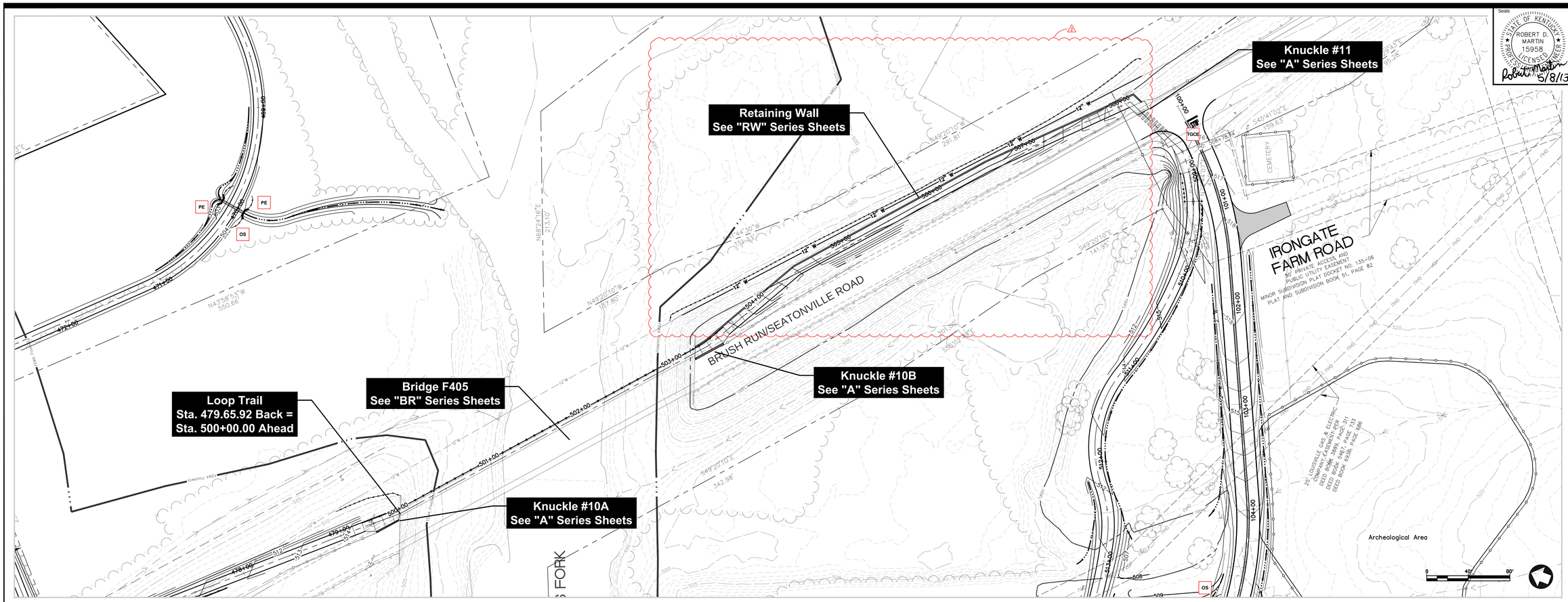

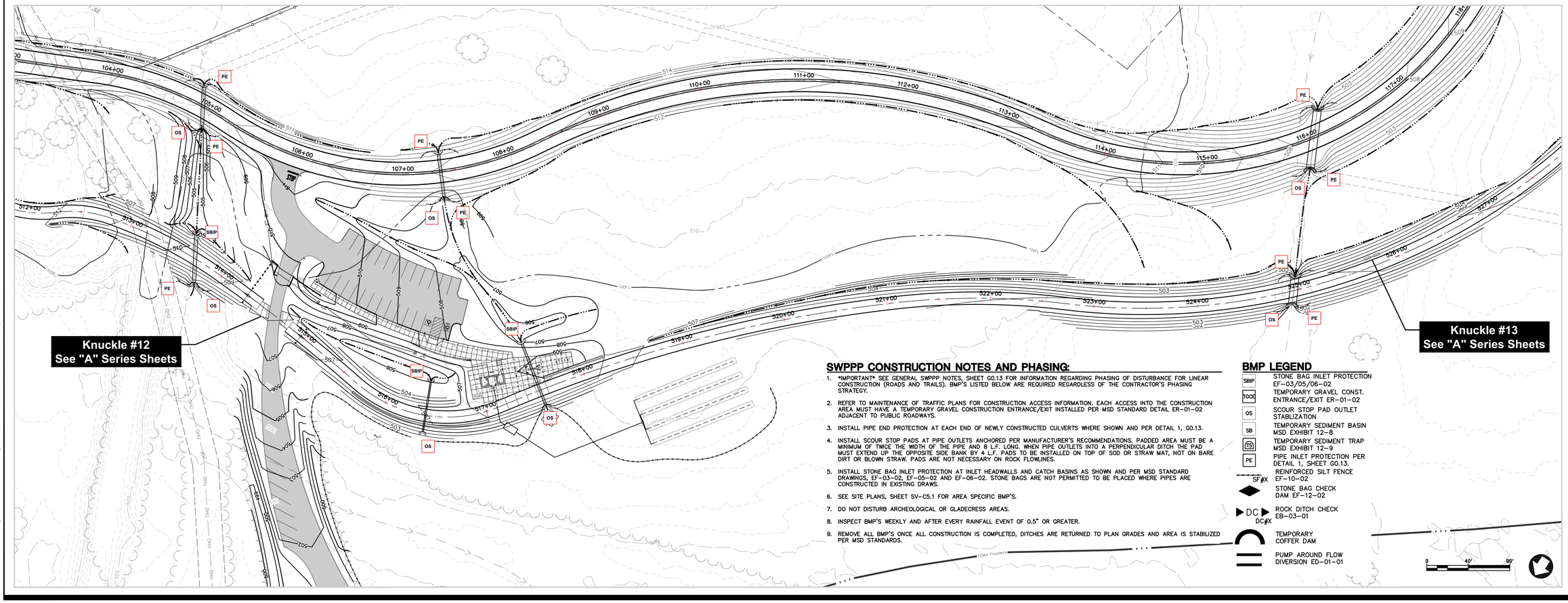

SWPPP CONSTRUCTION NOTES AND PHASING:

1. *IMPORTANT* SEE GENERAL SWPPP NOTES, SHEET G0.13 FOR INFORMATION REGARDING PHASING OF DISTURBANCE FOR LINEAR CONSTRUCTION (ROADS AND TRAILS). BMP'S LISTED BELOW ARE REQUIRED REGARDLESS OF THE CONTRACTOR'S PHASING STRATEGY.
2. REFER TO MAINTENANCE OF TRAFFIC PLANS FOR CONSTRUCTION ACCESS INFORMATION. EACH ACCESS INTO THE CONSTRUCTION AREA MUST HAVE A TEMPORARY GRAVEL CONSTRUCTION ENTRANCE/EXIT INSTALLED PER MSD STANDARD DETAIL ER-01-02 ADJACENT TO PUBLIC ROADWAYS.
3. INSTALL PIPE END PROTECTION AT EACH END OF NEWLY CONSTRUCTED CULVERTS WHERE SHOWN AND PER DETAIL 1, G0.13.
4. INSTALL SCOUR STOP PADS AT PIPE OUTLETS ANCHORED PER MANUFACTURER'S RECOMMENDATIONS. PADDED AREA MUST BE A MINIMUM OF TWICE THE WIDTH OF THE PIPE AND 8 L.F. LONG. WHEN PIPE OUTLETS INTO A PERPENDICULAR DITCH THE PAD MUST EXTEND UP THE OPPOSITE SIDE BANK BY 4 L.F. PADS TO BE INSTALLED ON TOP OF SOD OR STRAW MAT, NOT ON BARE DIRT OR BLOWN STRAW. PADS ARE NOT NECESSARY ON ROCK FLOWLINES.
5. INSTALL STONE BAG INLET PROTECTION AT INLET HEADWALLS AND CATCH BASINS AS SHOWN AND PER MSD STANDARD DRAWINGS, EF-03-02, EF-05-02 AND EF-06-02. STONE BAGS ARE NOT PERMITTED TO BE PLACED WHERE PIPES ARE CONSTRUCTED IN EXISTING DRAWS.
6. SEE SITE PLANS, SHEET SV-C5.1 FOR AREA SPECIFIC BMP'S.
7. DO NOT DISTURB ARCHEOLOGICAL OR GLADECRESS AREAS.
8. INSPECT BMP'S WEEKLY AND AFTER EVERY RAINFALL EVENT OF 0.5" OR GREATER.
9. REMOVE ALL BMP'S ONCE ALL CONSTRUCTION IS COMPLETED, DITCHES ARE RETURNED TO PLAN GRADES AND AREA IS STABILIZED PER MSD STANDARDS.

BMP LEGEND

- SBIP — STONE BAG INLET PROTECTION EF-03/05/06-02
- TGCE — TEMPORARY GRAVEL CONST. ENTRANCE/EXIT ER-01-02
- OS — SCOUR STOP PAD OUTLET STABILIZATION
- SB — TEMPORARY SEDIMENT BASIN MSD EXHIBIT 12-8
- TEMPORARY SEDIMENT TRAP MSD EXHIBIT 12-9
- PE — PIPE INLET PROTECTION PER DETAIL 1, SHEET G0.13.
- SF#X — REINFORCED SILT FENCE EF-10-02
- STONE BAG CHECK DAM EF-12-02
- DC DC#X — ROCK DITCH CHECK EB-03-01
- TEMPORARY COFFER DAM
- PUMP AROUND FLOW DIVERSION ED-01-01

Seals
STATE OF KENTUCKY
ROBERT D. MARTIN
15958
PROFESSIONAL ENGINEER
5/8/13

Engineering
Planning

1048 East Chestnut Street, Louisville, Kentucky 40204
Phone: 502-585-2222 Internet: www.qk4.com
Kentucky • Indiana • Georgia • Tennessee • Florida

LANDSCAPE ARCHITECT
Wallace Roberts & Todd, LLC
1700 Market Street
28th Floor
Philadelphia, PA 19103
tel 215.732.5215
fax 215.732.2551

Architect
BRAVURA
111 West Washington Street
Louisville, Kentucky 40202
T: (502) 584-9900
F: (502) 584-0029

The Parklands of Floyds Fork, Project 4A

The Strand, Turkey Run Park and Broad Run
Louisville, Kentucky

Owner:
21st Century Parks, Inc.
371 W. Main St., Suite 202
Louisville, Kentucky 40202

REV #	DATE	DESCRIPTION
2	05-30-2013	Addendum #2, MSD comments

Job No: 12300.4AC
Date: May 8, 2013
Scale: H 1" = 40' V 1" = 40'
Drawn By:

BID SET

Drawing Title:
Parklands of Floyds Fork

PROJECT 4A
Loop Trail
Grading Plans
Sta. 500+00 to 527+00

Drawing No:
LT-C2.11

May 31, 2013 - 9:46pm
M:\12300.4AC - 21st Century Parks Phase 4A\SITE\Drwgs\Civil\CP4 LW-ROAD AND TRAIL GD-11.dwg (LT-C2.11)

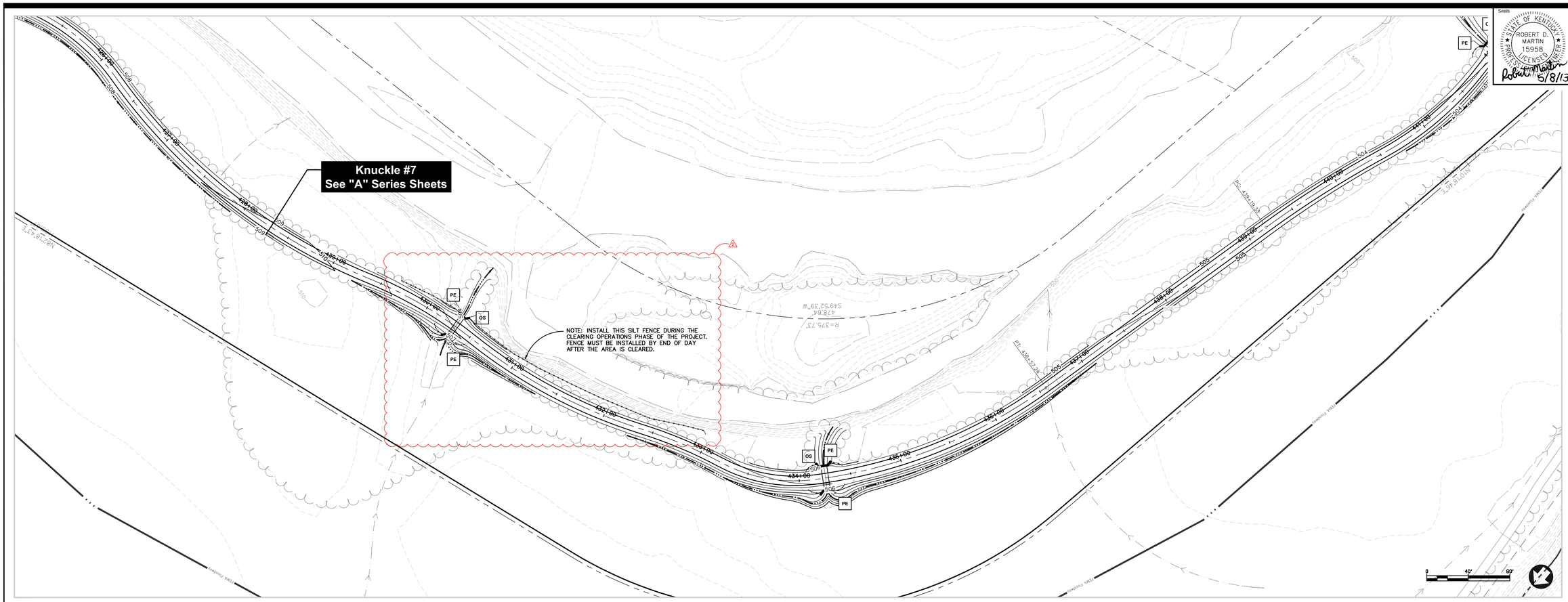

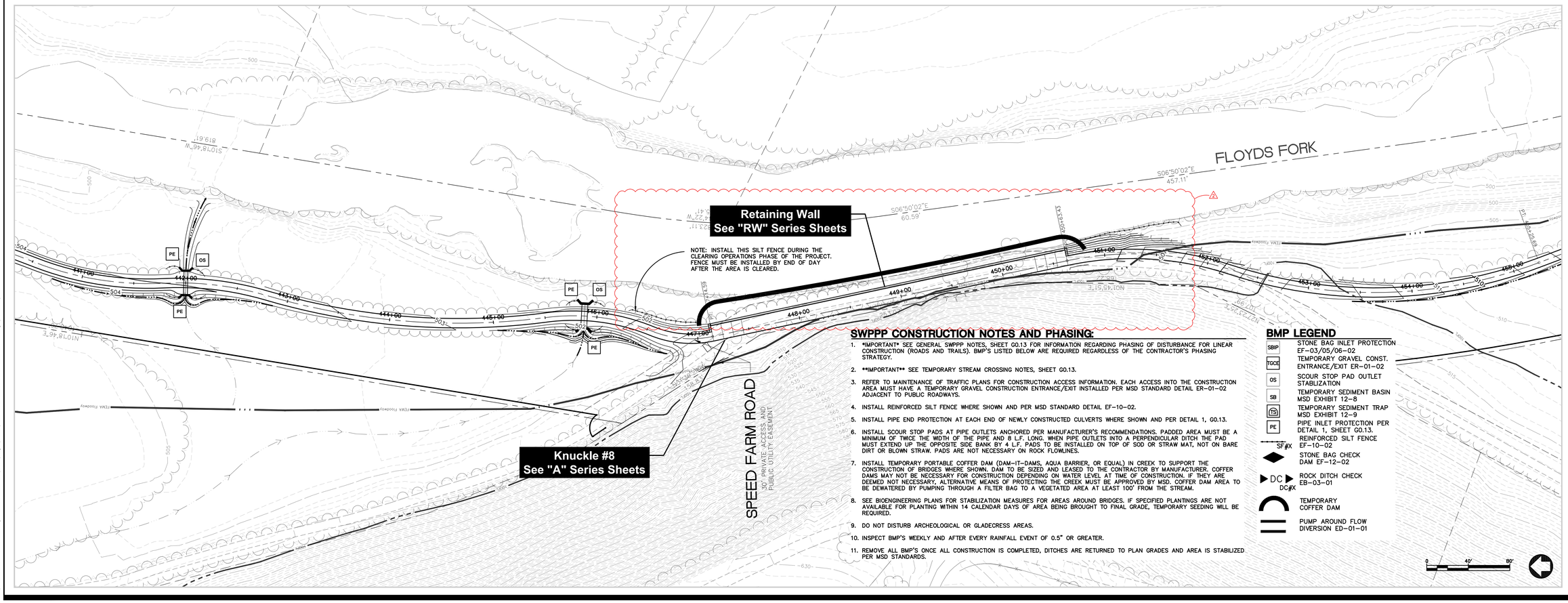

SWPPP CONSTRUCTION NOTES AND PHASING:

1. *IMPORTANT* SEE GENERAL SWPPP NOTES, SHEET G0.13 FOR INFORMATION REGARDING PHASING OF DISTURBANCE FOR LINEAR CONSTRUCTION (ROADS AND TRAILS). BMP'S LISTED BELOW ARE REQUIRED REGARDLESS OF THE CONTRACTOR'S PHASING STRATEGY.
2. **IMPORTANT** SEE TEMPORARY STREAM CROSSING NOTES, SHEET G0.13.
3. REFER TO MAINTENANCE OF TRAFFIC PLANS FOR CONSTRUCTION ACCESS INFORMATION. EACH ACCESS INTO THE CONSTRUCTION AREA MUST HAVE A TEMPORARY GRAVEL CONSTRUCTION ENTRANCE/EXIT INSTALLED PER MSD STANDARD DETAIL ER-01-02 ADJACENT TO PUBLIC ROADWAYS.
4. INSTALL REINFORCED SILT FENCE WHERE SHOWN AND PER MSD STANDARD DETAIL EF-10-02.
5. INSTALL PIPE END PROTECTION AT EACH END OF NEWLY CONSTRUCTED CULVERTS WHERE SHOWN AND PER DETAIL 1, G0.13.
6. INSTALL SCOUR STOP PADS AT PIPE OUTLETS ANCHORED PER MANUFACTURER'S RECOMMENDATIONS. PADDED AREA MUST BE A MINIMUM OF TWICE THE WIDTH OF THE PIPE AND 8 L.F. LONG. WHEN PIPE OUTLETS INTO A PERPENDICULAR DITCH THE PAD MUST EXTEND UP THE OPPOSITE SIDE BANK BY 4 L.F. PADS TO BE INSTALLED ON TOP OF SOD OR STRAW MAT, NOT ON BARE DIRT OR BLOWN STRAW. PADS ARE NOT NECESSARY ON ROCK FLOWLINES.
7. INSTALL TEMPORARY PORTABLE COFFER DAM (DAM-IT-DAMS, AQUA BARRIER, OR EQUAL) IN CREEK TO SUPPORT THE CONSTRUCTION OF BRIDGES WHERE SHOWN. DAM TO BE SIZED AND LEASED TO THE CONTRACTOR BY MANUFACTURER. COFFER DAMS MAY NOT BE NECESSARY FOR CONSTRUCTION DEPENDING ON WATER LEVEL AT TIME OF CONSTRUCTION. IF THEY ARE DEEMED NOT NECESSARY, ALTERNATIVE MEANS OF PROTECTING THE CREEK MUST BE APPROVED BY MSD. COFFER DAM AREA TO BE DEWATERED BY PUMPING THROUGH A FILTER BAG TO A VEGETATED AREA AT LEAST 100' FROM THE STREAM.
8. SEE BIOENGINEERING PLANS FOR STABILIZATION MEASURES FOR AREAS AROUND BRIDGES. IF SPECIFIED PLANTINGS ARE NOT AVAILABLE FOR PLANTING WITHIN 14 CALENDAR DAYS OF AREA BEING BROUGHT TO FINAL GRADE, TEMPORARY SEEDING WILL BE REQUIRED.
9. DO NOT DISTURB ARCHEOLOGICAL OR GLADECRESS AREAS.
10. INSPECT BMP'S WEEKLY AND AFTER EVERY RAINFALL EVENT OF 0.5" OR GREATER.
11. REMOVE ALL BMP'S ONCE ALL CONSTRUCTION IS COMPLETED, DITCHES ARE RETURNED TO PLAN GRADES AND AREA IS STABILIZED PER MSD STANDARDS.

BMP LEGEND

- SBIP — STONE BAG INLET PROTECTION EF-03/05/06-02
- TGCE — TEMPORARY GRAVEL CONST. ENTRANCE/EXIT ER-01-02
- OS — SCOUR STOP PAD OUTLET STABLIZATION
- SB — TEMPORARY SEDIMENT BASIN MSD EXHIBIT 12-8
- TSB — TEMPORARY SEDIMENT TRAP MSD EXHIBIT 12-9
- PE — PIPE INLET PROTECTION PER DETAIL 1, SHEET G0.13.
- SF#X — REINFORCED SILT FENCE EF-10-02
- STONE BAG CHECK DAM EF-12-02
- DC#X — ROCK DITCH CHECK EB-03-01
- TEMPORARY COFFER DAM
- PUMP AROUND FLOW DIVERSION ED-01-01

Seals

STATE OF KENTUCKY
ROBERT D. MARTIN
15958
PROFESSIONAL ENGINEER
LICENSED
5/8/13

Engineering
Planning
1046 East Chestnut Street, Louisville, Kentucky 40204
Phone: 502-585-2222 Internet: www.qk4.com
Kentucky • Indiana • Georgia • Tennessee • Florida

LANDSCAPE ARCHITECT
WRT
Wallace Roberts & Todd, LLC
1700 Market Street
28th Floor
Philadelphia, PA 19103
tel 215.732.5215
fax 215.732.2551

Architect
BRAVURA
111 West Washington Street
Louisville, Kentucky 40202
T: (502) 584-9900
F: (502) 584-0929

The Parklands of Floyds Fork, Project 4A

The Strand, Turkey Run Park and Broad Run
Louisville, Kentucky

Owner:
21st Century Parks, Inc.
3711 W. Market St., Suite 202
Louisville, Kentucky 40202

REV #	DATE	DESCRIPTION
2	05-30-2013	Addendum 2, MSD comments

Job No: 12300.4AC
Date: May 8, 2013
Scale: H 1" = 40' V 1" = 40'
Drawn By:

BID SET

Drawing Title:
Parklands of Floyds Fork

PROJECT 4A
Loop Trail
Grading Plans
Sta. 427+00 to 456+00

Drawing No:
LT-C2.9

May 31, 2013 - 3:53pm
M:\12300.4AC - 21st Century Parks Phase 4A\SITE\Drwgs\Civil\12104 LW-ROAD AND TRAIL GD-4.dwg (LT-C2.9)

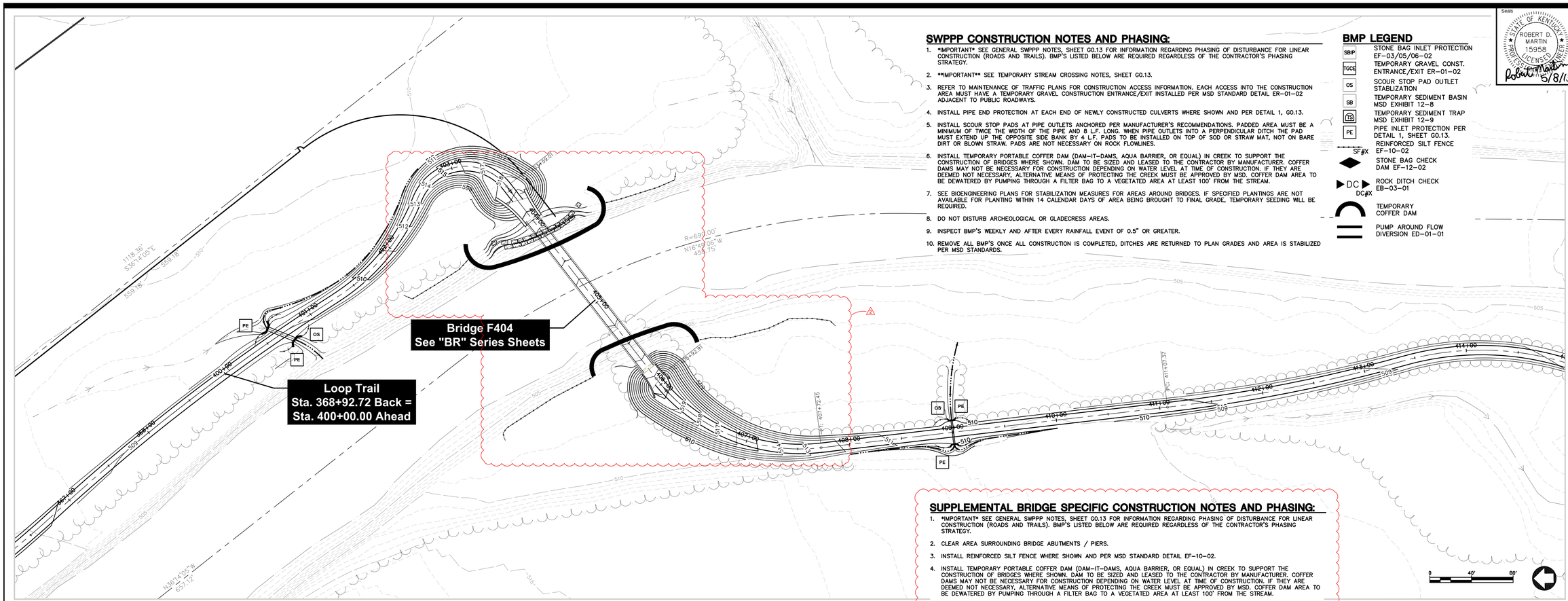

SWPPP CONSTRUCTION NOTES AND PHASING:

1. *IMPORTANT* SEE GENERAL SWPPP NOTES, SHEET G0.13 FOR INFORMATION REGARDING PHASING OF DISTURBANCE FOR LINEAR CONSTRUCTION (ROADS AND TRAILS). BMP'S LISTED BELOW ARE REQUIRED REGARDLESS OF THE CONTRACTOR'S PHASING STRATEGY.
2. **IMPORTANT** SEE TEMPORARY STREAM CROSSING NOTES, SHEET G0.13.
3. REFER TO MAINTENANCE OF TRAFFIC PLANS FOR CONSTRUCTION ACCESS INFORMATION. EACH ACCESS INTO THE CONSTRUCTION AREA MUST HAVE A TEMPORARY GRAVEL CONSTRUCTION ENTRANCE/EXIT INSTALLED PER MSD STANDARD DETAIL ER-01-02 ADJACENT TO PUBLIC ROADWAYS.
4. INSTALL PIPE END PROTECTION AT EACH END OF NEWLY CONSTRUCTED CULVERTS WHERE SHOWN AND PER DETAIL 1, G0.13.
5. INSTALL SCOUR STOP PADS AT PIPE OUTLETS ANCHORED PER MANUFACTURER'S RECOMMENDATIONS. PADDED AREA MUST BE A MINIMUM OF TWICE THE WIDTH OF THE PIPE AND 8 L.F. LONG. WHEN PIPE OUTLETS INTO A PERPENDICULAR DITCH THE PAD MUST EXTEND UP THE OPPOSITE SIDE BANK BY 4 L.F. PADS TO BE INSTALLED ON TOP OF SOD OR STRAW MAT, NOT ON BARE DIRT OR BLOWN STRAW. PADS ARE NOT NECESSARY ON ROCK FLOWLINES.
6. INSTALL TEMPORARY PORTABLE COFFER DAM (DAM-IT-DAMS, AQUA BARRIER, OR EQUAL) IN CREEK TO SUPPORT THE CONSTRUCTION OF BRIDGES WHERE SHOWN. DAM TO BE SIZED AND LEASED TO THE CONTRACTOR BY MANUFACTURER. COFFER DAMS MAY NOT BE NECESSARY FOR CONSTRUCTION DEPENDING ON WATER LEVEL AT TIME OF CONSTRUCTION. IF THEY ARE DEEMED NOT NECESSARY, ALTERNATIVE MEANS OF PROTECTING THE CREEK MUST BE APPROVED BY MSD. COFFER DAM AREA TO BE DEWATERED BY PUMPING THROUGH A FILTER BAG TO A VEGETATED AREA AT LEAST 100' FROM THE STREAM.
7. SEE BIOENGINEERING PLANS FOR STABILIZATION MEASURES FOR AREAS AROUND BRIDGES. IF SPECIFIED PLANTINGS ARE NOT AVAILABLE FOR PLANTING WITHIN 14 CALENDAR DAYS OF AREA BEING BROUGHT TO FINAL GRADE, TEMPORARY SEEDING WILL BE REQUIRED.
8. DO NOT DISTURB ARCHEOLOGICAL OR GLADECRESS AREAS.
9. INSPECT BMP'S WEEKLY AND AFTER EVERY RAINFALL EVENT OF 0.5" OR GREATER.
10. REMOVE ALL BMP'S ONCE ALL CONSTRUCTION IS COMPLETED, DITCHES ARE RETURNED TO PLAN GRADES AND AREA IS STABILIZED PER MSD STANDARDS.

BMP LEGEND

SBIP	STONE BAG INLET PROTECTION EF-03/05/06-02
TGCE	TEMPORARY GRAVEL CONST. ENTRANCE/EXIT ER-01-02
OS	SCOUR STOP PAD OUTLET STABLIZATION
SB	TEMPORARY SEDIMENT BASIN MSD EXHIBIT 12-8
TS	TEMPORARY SEDIMENT TRAP MSD EXHIBIT 12-9
PE	PIPE INLET PROTECTION PER DETAIL 1, SHEET G0.13.
SF#X	REINFORCED SILT FENCE EF-10-02
	STONE BAG CHECK DAM EF-12-02
DC DC#X	ROCK DITCH CHECK EB-03-01
	TEMPORARY COFFER DAM
	PUMP AROUND FLOW DIVERSION ED-01-01

SUPPLEMENTAL BRIDGE SPECIFIC CONSTRUCTION NOTES AND PHASING:

1. *IMPORTANT* SEE GENERAL SWPPP NOTES, SHEET G0.13 FOR INFORMATION REGARDING PHASING OF DISTURBANCE FOR LINEAR CONSTRUCTION (ROADS AND TRAILS). BMP'S LISTED BELOW ARE REQUIRED REGARDLESS OF THE CONTRACTOR'S PHASING STRATEGY.
2. CLEAR AREA SURROUNDING BRIDGE ABUTMENTS / PIERS.
3. INSTALL REINFORCED SILT FENCE WHERE SHOWN AND PER MSD STANDARD DETAIL EF-10-02.
4. INSTALL TEMPORARY PORTABLE COFFER DAM (DAM-IT-DAMS, AQUA BARRIER, OR EQUAL) IN CREEK TO SUPPORT THE CONSTRUCTION OF BRIDGES WHERE SHOWN. DAM TO BE SIZED AND LEASED TO THE CONTRACTOR BY MANUFACTURER. COFFER DAMS MAY NOT BE NECESSARY FOR CONSTRUCTION DEPENDING ON WATER LEVEL AT TIME OF CONSTRUCTION. IF THEY ARE DEEMED NOT NECESSARY, ALTERNATIVE MEANS OF PROTECTING THE CREEK MUST BE APPROVED BY MSD. COFFER DAM AREA TO BE DEWATERED BY PUMPING THROUGH A FILTER BAG TO A VEGETATED AREA AT LEAST 100' FROM THE STREAM.
5. PERFORM ROUGH GRADING OPERATIONS AT ABUTMENTS WHILE KEEPING THE DISTURBED LIMITS TO AN ABSOLUTE MINIMUM.
6. IF ROUGH GRADED AREA AROUND ABUTMENTS / PIERS REMAIN IN A STATE WHERE THE PERMANENT BIOENGINEERING STABILIZATION MEASURES CANNOT BE INSTALLED WITHIN 14 DAYS OF CONSTRUCTION ACTIVITIES, THEN THE CONTRACTOR MUST TEMPORARILY SEED AND STRAW DISTURBED AREAS. HOWEVER THE CONTRACTOR SHALL BE REQUIRED TO INSTALL THE PERMANENT BIOENGINEERING STABILIZATION MEASURES AS SOON AS IT IS PRACTICE TO DO SO.
6. CONSTRUCT ABUTMENTS / PIERS / ERECT BRIDGE
7. FINAL GRADE DISTURBED AREAS
8. INSTALL PERMANENT BIOENGINEERING STABILIZATION MEASURES AS DETAILED IN BR SERIES SHEETS.
9. DO NOT DISTURB ARCHEOLOGICAL OR GLADECRESS AREAS.
10. INSPECT BMP'S WEEKLY AND AFTER EVERY RAINFALL EVENT OF 0.5" OR GREATER.
11. REMOVE ALL BMP'S ONCE ALL CONSTRUCTION IS COMPLETED, DITCHES ARE RETURNED TO PLAN GRADES AND AREA IS STABILIZED PER MSD STANDARDS.

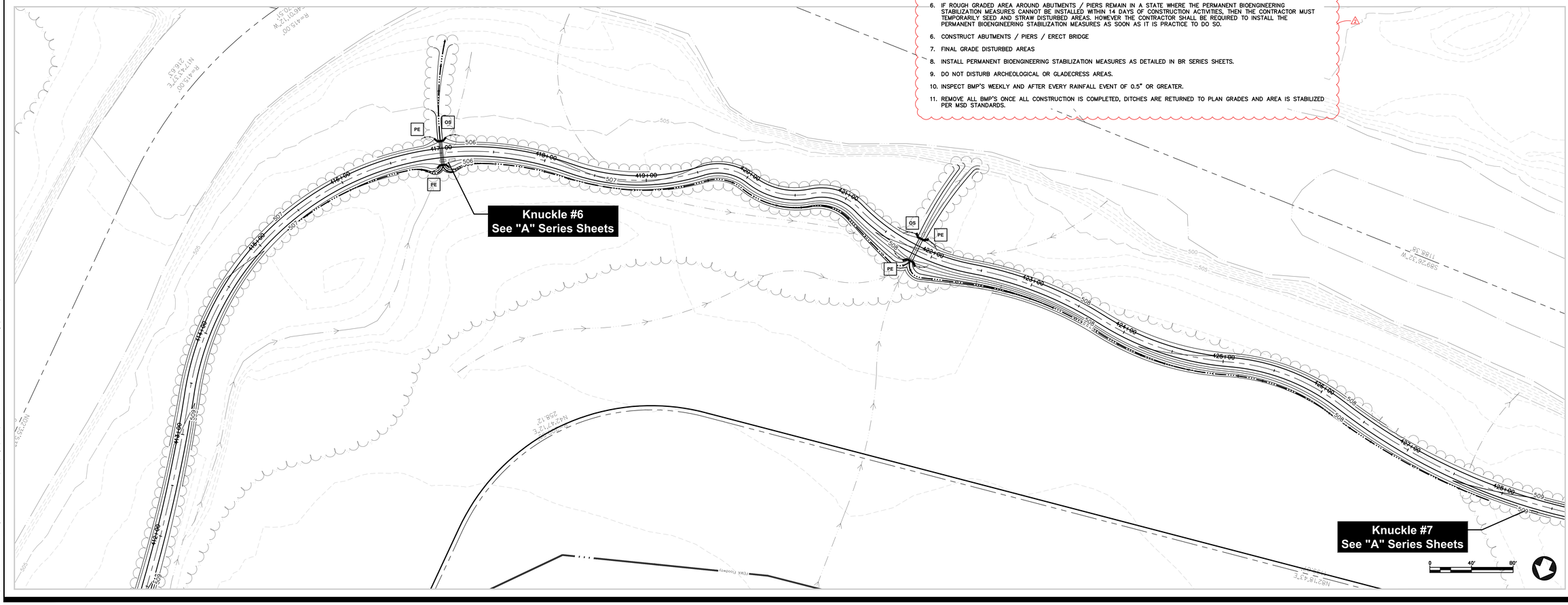

Seals

STATE OF KENTUCKY
ROBERT D. MARTIN
15958
PROFESSIONAL ENGINEER
LICENSED
5/8/13

Engineering
Planning
1046 East Chestnut Street, Louisville, Kentucky 40204
Phone: 502-585-2222 Internet: www.qk4.com
Kentucky • Indiana • Georgia • Tennessee • Florida

LANDSCAPE ARCHITECT
Wallace Roberts & Todd, LLC
1700 Market Street
28th Floor
Philadelphia, PA 19103
tel 215.732.5215
fax 215.732.2551

Architect
BRAVURA
111 West Washington Street
Louisville, Kentucky 40202
T: (502) 584-9900
F: (502) 584-0029

The Parklands of Floyds Fork, Project 4A

The Strand, Turkey Run Park and Broad Run
Louisville, Kentucky

Owner:
21st Century Parks, Inc.
371 W Main St., Suite 202
Louisville, Kentucky 40202

REV #	DATE	DESCRIPTION
2	05-30-2013	Addendum2: MSD comments

Job No:	12300.4AC
Date:	May 8, 2013
Scale:	H 1" = 40' V 1" = 40'
Drawn By:	

BID SET

Drawing Title:

Parklands of Floyds Fork

PROJECT 4A
Loop Trail
Grading Plans
Sta. 400+00 to 427+00

Drawing No:

LT-C2.8

May 31, 2013 - 3:53pm
N:\12300.4AC - 21st Century Parks Phase 4A\SITE\Dwgs\Civil\CP4 LW-ROAD AND TRAIL GD-4.dwg (LT-C2.8)

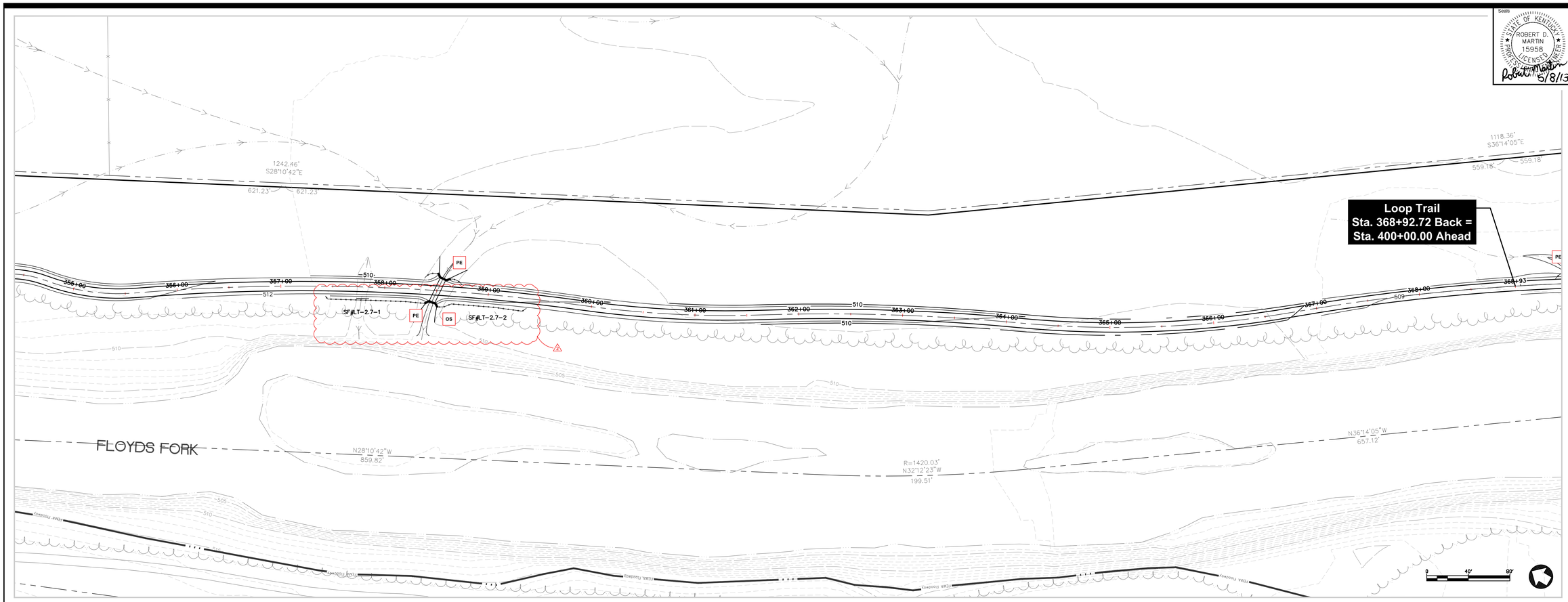

SWPPP CONSTRUCTION NOTES AND PHASING:

1. *IMPORTANT* SEE GENERAL SWPPP NOTES, SHEET G0.13 FOR INFORMATION REGARDING PHASING OF DISTURBANCE FOR LINEAR CONSTRUCTION (ROADS AND TRAILS). BMP'S LISTED BELOW ARE REQUIRED REGARDLESS OF THE CONTRACTOR'S PHASING STRATEGY.
2. REFER TO MAINTENANCE OF TRAFFIC PLANS FOR CONSTRUCTION ACCESS INFORMATION. EACH ACCESS INTO THE CONSTRUCTION AREA MUST HAVE A TEMPORARY GRAVEL CONSTRUCTION ENTRANCE/EXIT INSTALLED PER MSD STANDARD DETAIL ER-01-02 ADJACENT TO PUBLIC ROADWAYS.
3. INSTALL PIPE END PROTECTION AT EACH END OF NEWLY CONSTRUCTED CULVERTS WHERE SHOWN AND PER DETAIL 1, G0.13.
4. INSTALL SCOUR STOP PADS AT PIPE OUTLETS ANCHORED PER MANUFACTURER'S RECOMMENDATIONS. PADDED AREA MUST BE A MINIMUM OF TWICE THE WIDTH OF THE PIPE AND 8 L.F. LONG. WHEN PIPE OUTLETS INTO A PERPENDICULAR DITCH THE PAD MUST EXTEND UP THE OPPOSITE SIDE BANK BY 4 L.F. PADS TO BE INSTALLED ON TOP OF SOD OR STRAW MAT, NOT ON BARE DIRT OR BLOWN STRAW. PADS ARE NOT NECESSARY ON ROCK FLOWLINES.
5. DO NOT DISTURB ARCHEOLOGICAL OR GLADECRESS AREAS.
6. INSPECT BMP'S WEEKLY AND AFTER EVERY RAINFALL EVENT OF 0.5" OR GREATER.
7. REMOVE ALL BMP'S ONCE ALL CONSTRUCTION IS COMPLETED, DITCHES ARE RETURNED TO PLAN GRADES AND AREA IS STABILIZED PER MSD STANDARDS.

BMP LEGEND

- SBIP — STONE BAG INLET PROTECTION EF-03/05/06-02
- TGCE — TEMPORARY GRAVEL CONST. ENTRANCE/EXIT ER-01-02
- OS — SCOUR STOP PAD OUTLET STABLIZATION
- SB — TEMPORARY SEDIMENT BASIN MSD EXHIBIT 12-8
- TS — TEMPORARY SEDIMENT TRAP MSD EXHIBIT 12-9
- PE — PIPE INLET PROTECTION PER DETAIL 1, SHEET G0.13.
- SF#X — REINFORCED SILT FENCE EF-10-02
- STONE BAG CHECK DAM EF-12-02
- DC / DC#X — ROCK DITCH CHECK EB-03-01
- TEMPORARY COFFER DAM
- PUMP AROUND FLOW DIVERSION ED-01-01

Seals

STATE OF KENTUCKY
ROBERT D. MARTIN
15958
PROFESSIONAL ENGINEER
LICENSED
Robert D. Martin 5/8/13

Engineering
Planning
QK4
1046 East Chestnut Street, Louisville, Kentucky 40204
Phone: 502-585-2222 Internet: www.qk4.com
Kentucky • Indiana • Georgia • Tennessee • Florida

LANDSCAPE ARCHITECT
WRT
Wallace Roberts & Todd, LLC
1700 Market Street
28th Floor
Philadelphia, PA 19103
tel 215.732.5215
fax 215.732.2551

Architect
BRAVURA
111 West Washington Street
Louisville, Kentucky 40202
T: (502) 584-9900
F: (502) 584-0929

The Parklands of Floyds Fork, Project 4A

The Strand, Turkey Run Park and Broad Run
Louisville, Kentucky

Owner:
21st Century Parks, Inc.
371 W. Main St., Suite 202
Louisville, Kentucky 40202

REV #	DATE	DESCRIPTION
2	05-30-2013	Addendum2, MSD comments

Job No: 12300.4AC
Date: May 8, 2013
Scale: H 1" = 40' V 1" = 40'
Drawn By:

BID SET

Drawing Title:
Parklands of Floyds Fork

PROJECT 4A
Loop Trail
Grading Plans
Sta. 355+00 to 368+93

Drawing No:
LT-C2.7

May 31, 2013 - 3:04pm
M:\12300.4AC - 21st Century Parks Phase 4A\SITE\Drwgs\Cover\21CP4 LW-ROAD AND TRAIL GD-3.dwg (LT-C2.7)

SUPPLEMENTAL BRIDGE SPECIFIC CONSTRUCTION NOTES AND PHASING:

1. *IMPORTANT* SEE GENERAL SWPPP NOTES, SHEET G0.13 FOR INFORMATION REGARDING PHASING OF DISTURBANCE FOR LINEAR CONSTRUCTION (ROADS AND TRAILS). BMP'S LISTED BELOW ARE REQUIRED REGARDLESS OF THE CONTRACTOR'S PHASING STRATEGY.
2. CLEAR AREA SURROUNDING BRIDGE ABUTMENTS / PIERS.
3. INSTALL REINFORCED SILT FENCE WHERE SHOWN AND PER MSD STANDARD DETAIL EF-10-02.
4. INSTALL TEMPORARY PORTABLE COFFER DAM (DAM-IT-DAMS, AQUA BARRIER, OR EQUAL) IN CREEK TO SUPPORT THE CONSTRUCTION OF BRIDGES WHERE SHOWN. DAM TO BE SIZED AND LEASED TO THE CONTRACTOR BY MANUFACTURER. COFFER DAMS MAY NOT BE NECESSARY FOR CONSTRUCTION DEPENDING ON WATER LEVEL AT TIME OF CONSTRUCTION. IF THEY ARE DEEMED NOT NECESSARY, ALTERNATIVE MEANS OF PROTECTING THE CREEK MUST BE APPROVED BY MSD. COFFER DAM AREA TO BE DEWATERED BY PUMPING THROUGH A FILTER BAG TO A VEGETATED AREA AT LEAST 100' FROM THE STREAM.
5. PERFORM ROUGH GRADING OPERATIONS AT ABUTMENTS WHILE KEEPING THE DISTURBED LIMITS TO AN ABSOLUTE MINIMUM.
6. IF ROUGH GRADED AREA AROUND ABUTMENTS / PIERS REMAIN IN A STATE WHERE THE PERMANENT BIOENGINEERING STABILIZATION MEASURES CANNOT BE INSTALLED WITHIN 14 DAYS OF CONSTRUCTION ACTIVITIES, THEN THE CONTRACTOR MUST TEMPORARILY SEED AND STRAW DISTURBED AREAS. HOWEVER THE CONTRACTOR SHALL BE REQUIRED TO INSTALL THE PERMANENT BIOENGINEERING STABILIZATION MEASURES AS SOON AS IT IS PRACTICE TO DO SO.
6. CONSTRUCT ABUTMENTS / PIERS / ERECT BRIDGE
7. FINAL GRADE DISTURBED AREAS
8. INSTALL PERMANENT BIOENGINEERING STABILIZATION MEASURES AS DETAILED IN BR SERIES SHEETS.
9. DO NOT DISTURB ARCHEOLOGICAL OR GLADECRESS AREAS.
10. INSPECT BMP'S WEEKLY AND AFTER EVERY RAINFALL EVENT OF 0.5" OR GREATER.
11. REMOVE ALL BMP'S ONCE ALL CONSTRUCTION IS COMPLETED, DITCHES ARE RETURNED TO PLAN GRADES AND AREA IS STABILIZED PER MSD STANDARDS.

Loop Trail
Sta. 247+54.44 Back =
Sta. 300+00.00 Ahead

Bridge F403
See "BR" Series Sheets

Knuckle #5
See "A" Series Sheets

SF#LT-2.5-1
SF#LT-2.5-2
SF#LT-2.5-3
SF#LT-2.5-4
SF#LT-2.5-5

Archeological Area F5TQ

FLOYDS FORK

SWPPP CONSTRUCTION NOTES AND PHASING:

1. *IMPORTANT* SEE GENERAL SWPPP NOTES, SHEET G0.13 FOR INFORMATION REGARDING PHASING OF DISTURBANCE FOR LINEAR CONSTRUCTION (ROADS AND TRAILS). BMP'S LISTED BELOW ARE REQUIRED REGARDLESS OF THE CONTRACTOR'S PHASING STRATEGY.
2. **IMPORTANT** SEE TEMPORARY STREAM CROSSING NOTES, SHEET G0.13.
3. REFER TO MAINTENANCE OF TRAFFIC PLANS FOR CONSTRUCTION ACCESS INFORMATION. EACH ACCESS INTO THE CONSTRUCTION AREA MUST HAVE A TEMPORARY GRAVEL CONSTRUCTION ENTRANCE/EXIT INSTALLED PER MSD STANDARD DETAIL ER-01-02 ADJACENT TO PUBLIC ROADWAYS.
4. INSTALL REINFORCED SILT FENCE WHERE SHOWN AND PER MSD STANDARD DETAIL EF-10-02.
5. INSTALL PIPE END PROTECTION AT EACH END OF NEWLY CONSTRUCTED CULVERTS WHERE SHOWN AND PER DETAIL 1, G0.13.
6. INSTALL SCOUR STOP PADS AT PIPE OUTLETS ANCHORED PER MANUFACTURER'S RECOMMENDATIONS. PADDED AREA MUST BE A MINIMUM OF TWICE THE WIDTH OF THE PIPE AND 8 L.F. LONG. WHEN PIPE OUTLETS INTO A PERPENDICULAR DITCH THE PAD MUST EXTEND UP THE OPPOSITE SIDE BANK BY 4 L.F. PADS TO BE INSTALLED ON TOP OF SOD OR STRAW MAT, NOT ON BARE DIRT OR BLOWN STRAW. PADS ARE NOT NECESSARY ON ROCK FLOWLINES.
7. INSTALL TEMPORARY PORTABLE COFFER DAM (DAM-IT-DAMS, AQUA BARRIER, OR EQUAL) IN CREEK TO SUPPORT THE CONSTRUCTION OF BRIDGES WHERE SHOWN. DAM TO BE SIZED AND LEASED TO THE CONTRACTOR BY MANUFACTURER. COFFER DAMS MAY NOT BE NECESSARY FOR CONSTRUCTION DEPENDING ON WATER LEVEL AT TIME OF CONSTRUCTION. IF THEY ARE DEEMED NOT NECESSARY, ALTERNATIVE MEANS OF PROTECTING THE CREEK MUST BE APPROVED BY MSD. COFFER DAM AREA TO BE DEWATERED BY PUMPING THROUGH A FILTER BAG TO A VEGETATED AREA AT LEAST 100' FROM THE STREAM.
8. SEE BIOENGINEERING PLANS FOR STABILIZATION MEASURES FOR AREAS AROUND BRIDGES. IF SPECIFIED PLANTINGS ARE NOT AVAILABLE FOR PLANTING WITHIN 14 CALENDAR DAYS OF AREA BEING BROUGHT TO FINAL GRADE, TEMPORARY SEEDING WILL BE REQUIRED.
9. SEE SITE PLANS, SHEET ST-C5.1 FOR AREA SPECIFIC BMP'S.
10. DO NOT DISTURB ARCHEOLOGICAL OR GLADECRESS AREAS.
11. INSPECT BMP'S WEEKLY AND AFTER EVERY RAINFALL EVENT OF 0.5" OR GREATER.
12. REMOVE ALL BMP'S ONCE ALL CONSTRUCTION IS COMPLETED, DITCHES ARE RETURNED TO PLAN GRADES AND AREA IS STABILIZED PER MSD STANDARDS.

BMP LEGEND

SBIP	STONE BAG INLET PROTECTION EF-03/05/06-02
TGCE	TEMPORARY GRAVEL CONST. ENTRANCE/EXIT ER-01-02
OS	SCOUR STOP PAD OUTLET STABLIZATION
SB	TEMPORARY SEDIMENT BASIN MSD EXHIBIT 12-8
TS	TEMPORARY SEDIMENT TRAP MSD EXHIBIT 12-9
PE	PIPE INLET PROTECTION PER DETAIL 1, SHEET G0.13.
SF#X	REINFORCED SILT FENCE EF-10-02
	STONE BAG CHECK DAM EF-12-02
DC#X	ROCK DITCH CHECK EB-03-01
	TEMPORARY COFFER DAM
	PUMP AROUND FLOW DIVERSION ED-01-01

0 40' 80'

Seals
STATE OF KENTUCKY
ROBERT D. MARTIN
15958
PROFESSIONAL ENGINEER
5/8/13

Engineering
Planning
1046 East Chestnut Street, Louisville, Kentucky 40204
Phone: 502-585-2222 Internet: www.qk4.com
Kentucky • Indiana • Georgia • Tennessee • Florida

LANDSCAPE ARCHITECT
Wallace Roberts & Todd, LLC
1700 Market Street
28th Floor
Philadelphia, PA 19103
tel 215.732.5215
fax 215.732.2551

Architect
BRAVURA
111 West Washington Street
Louisville, Kentucky 40202
T: (502) 584-9900
F: (502) 584-0029

The Parklands of Floyds Fork, Project 4A

The Strand, Turkey Run Park and Broad Run
Louisville, Kentucky

Owner:
21st Century Parks, Inc.
371 W. Main St., Suite 202
Louisville, Kentucky 40202

REV #	DATE	DESCRIPTION
2	05-30-2013	Addendum2, MSD comments

Job No: 12300.4AC
Date: May 8, 2013
Scale: H 1" = 40' V 1" = 40'
Drawn By:

BID SET

Drawing Title:
Parklands of Floyds Fork

PROJECT 4A
Loop Trail
Grading Plans
Sta. 300+00 to 327+00

Drawing No:
LT-C2.5

May 31, 2013 - 5:10pm
C:\Users\Victor.Park-NT\Desktop\Vcost\temp\AcPublish_3440\310P4 LW-ROAD AND TRAIL GD-3.dwg (LT-C2.5)

SUPPLEMENTAL BRIDGE SPECIFIC CONSTRUCTION NOTES AND PHASING:

1. *IMPORTANT* SEE GENERAL SWPPP NOTES, SHEET G0.13 FOR INFORMATION REGARDING PHASING OF DISTURBANCE FOR LINEAR CONSTRUCTION (ROADS AND TRAILS). BMP'S LISTED BELOW ARE REQUIRED REGARDLESS OF THE CONTRACTOR'S PHASING STRATEGY.
2. CLEAR AREA SURROUNDING BRIDGE ABUTMENTS / PIERS AND MANUVERING AND STAGING AREAS.
3. INSTALL REINFORCED SILT FENCE WHERE SHOWN AND PER MSD STANDARD DETAIL EF-10-02.
4. INSTALL TEMPORARY PORTABLE COFFER DAM (DAM-IT-DAMS, AQUA BARRIER, OR EQUAL) IN CREEK TO SUPPORT THE CONSTRUCTION OF BRIDGES WHERE SHOWN. DAM TO BE SIZED AND LEASED TO THE CONTRACTOR BY MANUFACTURER. COFFER DAMS MAY NOT BE NECESSARY FOR CONSTRUCTION DEPENDING ON WATER LEVEL AT TIME OF CONSTRUCTION. IF THEY ARE DEEMED NOT NECESSARY, ALTERNATIVE MEANS OF PROTECTING THE CREEK MUST BE APPROVED BY MSD. COFFER DAM AREA TO BE DEWATERED BY PUMPING THROUGH A FILTER BAG TO A VEGETATED AREA AT LEAST 100' FROM THE STREAM.
5. PERFORM ROUGH GRADING OPERATIONS AT ABUTMENTS WHILE KEEPING THE DISTURBED LIMITS TO AN ABSOLUTE MINIMUM.
6. IF ROUGH GRADED AREA AROUND ABUTMENTS / PIERS REMAIN IN A STATE WHERE THE PERMANENT BIOENGINEERING STABILIZATION MEASURES CANNOT BE INSTALLED WITHIN 14 DAYS OF CONSTRUCTION ACTIVITIES, THEN THE CONTRACTOR MUST TEMPORARILY SEED AND STRAW DISTURBED AREAS. HOWEVER THE CONTRACTOR SHALL BE REQUIRED TO INSTALL THE PERMANENT BIOENGINEERING STABILIZATION MEASURES AS SOON AS IT IS PRACTICE TO DO SO.
6. CONSTRUCT ABUTMENTS / PIERS / ERECT BRIDGE
7. FINAL GRADE DISTURBED AREAS
8. INSTALL PERMANENT BIOENGINEERING STABILIZATION MEASURES AS DETAILED IN BR SERIES SHEETS.
9. DO NOT DISTURB ARCHEOLOGICAL OR GLADECRESS AREAS.
10. INSPECT BMP'S WEEKLY AND AFTER EVERY RAINFALL EVENT OF 0.5" OR GREATER.
11. REMOVE ALL BMP'S ONCE ALL CONSTRUCTION IS COMPLETED, DITCHES ARE RETURNED TO PLAN GRADES AND AREA IS STABILIZED PER MSD STANDARDS.

ACCESS NOTE: ACCESS TO CONSTRUCT BRIDGE F401 MAY BE VIA THE LOUISVILLE LOOP TRAIL ALIGNMENT FROM THE END OF PROJECT CONSTRUCTION OF PHASE 3 TO SUBJECT PROJECT STATION 200+00. OTHERWISE THE CONTRACTOR MAY ELECT TO OBTAIN A TEMPORARY STREAM CROSSING PERMIT AS DISCUSSED IN DETAIL IN "TEMPORARY STREAM CROSSING NOTES", SHEET G0.13.

ACCESS NOTE: ACCESS TO CONSTRUCT BRIDGE F402 MAY BE VIA THE LOUISVILLE LOOP TRAIL ALIGNMENT FROM STATION 209+00 TO STATION 219+00. OTHERWISE THE CONTRACTOR MAY ELECT TO OBTAIN A TEMPORARY STREAM CROSSING PERMIT AS DISCUSSED IN DETAIL IN "TEMPORARY STREAM CROSSING NOTES", SHEET G0.13.

Retaining Wall
See "RW" Series Sheets

Bridge F401
See "BR" Series Sheets

Bridge F402A
See "BR" Series Sheets

Bridge F402B
See "BR" Series Sheets

Loop Trail
Sta. 152+19.45 Back =
Sta. 200+00.00 Ahead

Path to Jones Viewpoint
"Not In Contract"

LOYDS FORK

0 40' 80'

SWPPP CONSTRUCTION NOTES AND PHASING:

1. *IMPORTANT* SEE GENERAL SWPPP NOTES, SHEET G0.13 FOR INFORMATION REGARDING PHASING OF DISTURBANCE FOR LINEAR CONSTRUCTION (ROADS AND TRAILS). BMP'S LISTED BELOW ARE REQUIRED REGARDLESS OF THE CONTRACTOR'S PHASING STRATEGY.
2. **IMPORTANT** SEE TEMPORARY STREAM CROSSING NOTES, SHEET G0.13.
3. REFER TO MAINTENANCE OF TRAFFIC PLANS FOR CONSTRUCTION ACCESS INFORMATION. EACH ACCESS INTO THE CONSTRUCTION AREA MUST HAVE A TEMPORARY GRAVEL CONSTRUCTION ENTRANCE/EXIT INSTALLED PER MSD STANDARD DETAIL ER-01-02 ADJACENT TO PUBLIC ROADWAYS.
4. INSTALL REINFORCED SILT FENCE WHERE SHOWN AND PER MSD STANDARD DETAIL EF-10-02.
5. INSTALL PIPE END PROTECTION AT EACH END OF NEWLY CONSTRUCTED CULVERTS WHERE SHOWN AND PER DETAIL 1, G0.13.
6. INSTALL SCOUR STOP PADS AT PIPE OUTLETS ANCHORED PER MANUFACTURER'S RECOMMENDATIONS. PADDED AREA MUST BE A MINIMUM OF TWICE THE WIDTH OF THE PIPE AND 8 L.F. LONG. WHEN PIPE OUTLETS INTO A PERPENDICULAR DITCH THE PAD MUST EXTEND UP THE OPPOSITE SIDE BANK BY 4 L.F. PADS TO BE INSTALLED ON TOP OF SOD OR STRAW MAT, NOT ON BARE DIRT OR BLOWN STRAW. PADS ARE NOT NECESSARY ON ROCK FLOWLINES.
7. INSTALL TEMPORARY PORTABLE COFFER DAM (DAM-IT-DAMS, AQUA BARRIER, OR EQUAL) IN CREEK TO SUPPORT THE CONSTRUCTION OF BRIDGES WHERE SHOWN. DAM TO BE SIZED AND LEASED TO THE CONTRACTOR BY MANUFACTURER. COFFER DAMS MAY NOT BE NECESSARY FOR CONSTRUCTION DEPENDING ON WATER LEVEL AT TIME OF CONSTRUCTION. IF THEY ARE DEEMED NOT NECESSARY, ALTERNATIVE MEANS OF PROTECTING THE CREEK MUST BE APPROVED BY MSD. COFFER DAM AREA TO BE DEWATERED BY PUMPING THROUGH A FILTER BAG TO A VEGETATED AREA AT LEAST 100' FROM THE STREAM.
8. SEE BIOENGINEERING PLANS FOR STABILIZATION MEASURES FOR AREAS AROUND BRIDGES. IF SPECIFIED PLANTINGS ARE NOT AVAILABLE FOR PLANTING WITHIN 14 CALENDAR DAYS OF AREA BEING BROUGHT TO FINAL GRADE, TEMPORARY SEEDING WILL BE REQUIRED.
9. DO NOT DISTURB ARCHEOLOGICAL OR GLADECRESS AREAS.
10. INSPECT BMP'S WEEKLY AND AFTER EVERY RAINFALL EVENT OF 0.5" OR GREATER.
11. REMOVE ALL BMP'S ONCE ALL CONSTRUCTION IS COMPLETED, DITCHES ARE RETURNED TO PLAN GRADES AND AREA IS STABILIZED PER MSD STANDARDS.

BMP LEGEND

- SBIP — STONE BAG INLET PROTECTION EF-03/05/06-02
- TGCE — TEMPORARY GRAVEL CONST. ENTRANCE/EXIT ER-01-02
- OS — SCOUR STOP PAD OUTLET STABILIZATION
- SB — TEMPORARY SEDIMENT BASIN MSD EXHIBIT 12-8
- TRAP — TEMPORARY SEDIMENT TRAP MSD EXHIBIT 12-9
- PE — PIPE INLET PROTECTION PER DETAIL 1, SHEET G0.13.
- SF#X — REINFORCED SILT FENCE EF-10-02
- STONE BAG CHECK DAM EF-12-02
- DC / DC#X — ROCK DITCH CHECK EB-03-01
- TEMPORARY COFFER DAM
- PUMP AROUND FLOW DIVERSION ED-01-01

Retaining Wall
See "RW" Series Sheets

FLOYDS FORK

0 40' 80'

Seals

STATE OF KENTUCKY
ROBERT D. MARTIN
15958
LICENSED
PROFESSIONAL ENGINEER
5/8/13

Engineering
Planning

1046 East Chestnut Street, Louisville, Kentucky 40204
Phone: 502-585-2222 Internet: www.qk4.com
Kentucky • Indiana • Georgia • Tennessee • Florida

LANDSCAPE ARCHITECT
Wallace Roberts & Todd, LLC
1700 Market Street
28th Floor
Philadelphia, PA 19103
tel 215.732.5215
fax 215.732.2551

Architect
BRAVURA
111 West Washington Street
Louisville, Kentucky 40202
T: (502) 584-9900
F: (502) 584-0929

The Parklands of Floyds Fork, Project 4A

The Strand, Turkey Run Park and Broad Run
Louisville, Kentucky

Owner:
21st Century Parks, Inc.
311 W. Main St., Suite 202
Louisville, Kentucky 40202

REV #	DATE	DESCRIPTION
2	05-30-2013	Addendum2: JVSD comments

Job No: 12300.4AC
Date: May 8, 2013
Scale: H 1" = 40' V 1" = 40'
Drawn By:

BID SET

Drawing Title:

Parklands of Floyds Fork

PROJECT 4A
Loop Trail
Grading Plans
Sta. 200+00 to 227+00

Drawing No:

LT-C2.3

May 31, 2013 - 4:43pm
C:\Users\Victor.Pan-NT\appdata\local\temp\AcPublish_3440\2104 LW-ROAD AND TRAIL GD-2.dwg (LT-C2.3)

SWPPP CONSTRUCTION NOTES AND PHASING:

1. *IMPORTANT* SEE GENERAL SWPPP NOTES, SHEET G0.13 FOR INFORMATION REGARDING PHASING OF DISTURBANCE FOR LINEAR CONSTRUCTION (ROADS AND TRAILS). BMP'S LISTED BELOW ARE REQUIRED REGARDLESS OF THE CONTRACTOR'S PHASING STRATEGY.
2. REFER TO MAINTENANCE OF TRAFFIC PLANS FOR CONSTRUCTION ACCESS INFORMATION. EACH ACCESS INTO THE CONSTRUCTION AREA MUST HAVE A TEMPORARY GRAVEL CONSTRUCTION ENTRANCE/EXIT INSTALLED PER MSD STANDARD DETAIL ER-01-02 ADJACENT TO PUBLIC ROADWAYS.
3. INSTALL REINFORCED SILT FENCE WHERE SHOWN AND PER MSD STANDARD DETAIL EF-10-02.
4. INSTALL PIPE END PROTECTION AT EACH END OF NEWLY CONSTRUCTED CULVERTS WHERE SHOWN AND PER DETAIL 1, G0.13.
5. INSTALL SCOUR STOP PADS AT PIPE OUTLETS ANCHORED PER MANUFACTURER'S RECOMMENDATIONS. PADDED AREA MUST BE A MINIMUM OF TWICE THE WIDTH OF THE PIPE AND 8 L.F. LONG. WHEN PIPE OUTLETS INTO A PERPENDICULAR DITCH THE PAD MUST EXTEND UP THE OPPOSITE SIDE BANK BY 4 L.F. PADS TO BE INSTALLED ON TOP OF SOD OR STRAW MAT, NOT ON BARE DIRT OR BLOWN STRAW. PADS ARE NOT NECESSARY ON ROCK FLOWLINES.
6. INSTALL TEMPORARY PORTABLE COFFER DAM (DAM-IT-DAMS, AQUA BARRIER, OR EQUAL) IN CREEK TO SUPPORT THE CONSTRUCTION OF BRIDGES WHERE SHOWN. DAM TO BE SIZED AND LEASED TO THE CONTRACTOR BY MANUFACTURER. COFFER DAMS MAY NOT BE NECESSARY FOR CONSTRUCTION DEPENDING ON WATER LEVEL AT TIME OF CONSTRUCTION. IF THEY ARE DEEMED NOT NECESSARY, ALTERNATIVE MEANS OF PROTECTING THE CREEK MUST BE APPROVED BY MSD. COFFER DAM AREA TO BE DEWATERED BY PUMPING THROUGH A FILTER BAG TO A VEGETATED AREA AT LEAST 100' FROM THE STREAM.
7. DO NOT DISTURB ARCHEOLOGICAL OR GLADECRESS AREAS.
8. INSPECT BMP'S WEEKLY AND AFTER EVERY RAINFALL EVENT OF 0.5" OR GREATER.
9. REMOVE ALL BMP'S ONCE ALL CONSTRUCTION IS COMPLETED, DITCHES ARE RETURNED TO PLAN GRADES AND AREA IS STABILIZED PER MSD STANDARDS.

BMP LEGEND

- SBIP — STONE BAG INLET PROTECTION EF-03/05/06-02
- TGCE — TEMPORARY GRAVEL CONST. ENTRANCE/EXIT ER-01-02
- OS — SCOUR STOP PAD OUTLET STABLIZATION
- SB — TEMPORARY SEDIMENT BASIN MSD EXHIBIT 12-8
- TS — TEMPORARY SEDIMENT TRAP MSD EXHIBIT 12-9
- PE — PIPE INLET PROTECTION PER DETAIL 1, SHEET G0.13
- SF#X — REINFORCED SILT FENCE EF-10-02
- STONE BAG CHECK DAM EF-12-02
- DC / DC#X — ROCK DITCH CHECK EB-03-01
- TEMPORARY COFFER DAM
- PUMP AROUND FLOW DIVERSION ED-01-01

Knuckle #3
See "A" Series Sheets

Knuckle #4
See "A" Series Sheets

FLOODS FORK

N16°23'00"W 220.63'
N37°15'35"W 192.57'
N84°15'24"E 108.13'
N08°37'08"W 231.94'
N19°40'56"W 263.28'
N18°53'40"W 244.76'
N08°28'13"W 229.16'
N05°13'11"W 214.19'
N18°13'15"E 118.22'
N13°09'00"E 167.99'
N13°54'45"E 104.63'

Loop Trail
Sta. 152+19.45 Back =
Sta. 200+00.00 Ahead

Bridge F401
See "BR" Series Sheets

SUPPLEMENTAL BRIDGE SPECIFIC CONSTRUCTION NOTES AND PHASING:

1. *IMPORTANT* SEE GENERAL SWPPP NOTES, SHEET G0.13 FOR INFORMATION REGARDING PHASING OF DISTURBANCE FOR LINEAR CONSTRUCTION (ROADS AND TRAILS). BMP'S LISTED BELOW ARE REQUIRED REGARDLESS OF THE CONTRACTOR'S PHASING STRATEGY.
2. CLEAR AREA SURROUNDING BRIDGE ABUTMENTS / PIERS.
3. INSTALL REINFORCED SILT FENCE WHERE SHOWN AND PER MSD STANDARD DETAIL EF-10-02.
4. INSTALL TEMPORARY PORTABLE COFFER DAM (DAM-IT-DAMS, AQUA BARRIER, OR EQUAL) IN CREEK TO SUPPORT THE CONSTRUCTION OF BRIDGES WHERE SHOWN. DAM TO BE SIZED AND LEASED TO THE CONTRACTOR BY MANUFACTURER. COFFER DAMS MAY NOT BE NECESSARY FOR CONSTRUCTION DEPENDING ON WATER LEVEL AT TIME OF CONSTRUCTION. IF THEY ARE DEEMED NOT NECESSARY, ALTERNATIVE MEANS OF PROTECTING THE CREEK MUST BE APPROVED BY MSD. COFFER DAM AREA TO BE DEWATERED BY PUMPING THROUGH A FILTER BAG TO A VEGETATED AREA AT LEAST 100' FROM THE STREAM.
5. PERFORM ROUGH GRADING OPERATIONS AT ABUTMENTS WHILE KEEPING THE DISTURBED LIMITS TO AN ABSOLUTE MINIMUM.
6. IF ROUGH GRADED AREA AROUND ABUTMENTS / PIERS REMAIN IN A STATE WHERE THE PERMANENT BIOENGINEERING STABILIZATION MEASURES CANNOT BE INSTALLED WITHIN 14 DAYS OF CONSTRUCTION ACTIVITIES, THEN THE CONTRACTOR MUST TEMPORARILY SEED AND STRAW DISTURBED AREAS. HOWEVER THE CONTRACTOR SHALL BE REQUIRED TO INSTALL THE PERMANENT BIOENGINEERING STABILIZATION MEASURES AS SOON AS IT IS PRACTICE TO DO SO.
6. CONSTRUCT ABUTMENTS / PIERS / ERECT BRIDGE
7. FINAL GRADE DISTURBED AREAS
8. INSTALL PERMANENT BIOENGINEERING STABILIZATION MEASURES AS DETAILED IN BR SERIES SHEETS.
9. DO NOT DISTURB ARCHEOLOGICAL OR GLADECRESS AREAS.
10. INSPECT BMP'S WEEKLY AND AFTER EVERY RAINFALL EVENT OF 0.5" OR GREATER.
11. REMOVE ALL BMP'S ONCE ALL CONSTRUCTION IS COMPLETED, DITCHES ARE RETURNED TO PLAN GRADES AND AREA IS STABILIZED PER MSD STANDARDS.

0 40' 80'

Seals
STATE OF KENTUCKY
ROBERT D. MARTIN
15958
PROFESSIONAL LICENSED ENGINEER
5/8/13

Engineering
Planning

1046 East Chestnut Street, Louisville, Kentucky 40204
Phone: 502-585-2222 Internet: www.qk4.com
Kentucky • Indiana • Georgia • Tennessee • Florida

LANDSCAPE ARCHITECT
Wallace Roberts & Todd, LLC
1700 Market Street
28th Floor
Philadelphia, PA 19103
tel 215.732.5215
fax 215.732.2551

Architect
BRAVURA
111 West Washington Street
Louisville, Kentucky 40202
T: (502) 584-9900
F: (502) 584-0029

The Parklands of Floyds Fork, Project 4A

The Strand, Turkey Run Park and Broad Run
Louisville, Kentucky

Owner:
21st Century Parks, Inc.
371 W. Main St., Suite 202
Louisville, Kentucky 40202

REV #	DATE	DESCRIPTION
2	05-30-2013	Addendum 2, MSD comments

Job No: 12300.4AC
Date: May 8, 2013
Scale: H 1" = 40' V 1" = 40'
Drawn By:

BID SET

Drawing Title:
Parklands of Floyds Fork

PROJECT 4A
Loop Trail
Grading Plans
Sta. 127+00 to 152+19

Drawing No:
LT-C2.2

May 31, 2013 - 4:46pm
C:\Users\Victor.Pan-NT\Desktop\Vcool\Temp\AcPublish_3440\3104 LW-ROAD AND TRAIL GD-1.dwg (LT-C2.2)

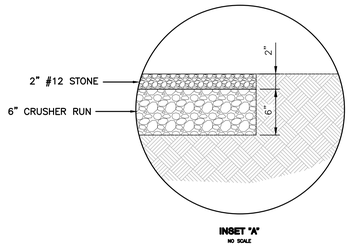

EXCURSION TRAIL - STONE FINES
DETAIL 1
SCALE: NONE — ET-C1.11 | ET-C3.1

APPLICABLE STATIONS
2160 L.F. IN "TYLER SCHOOLING" AREA OF PROJECT 3A (SHEET ET-C1.11/C2.4)

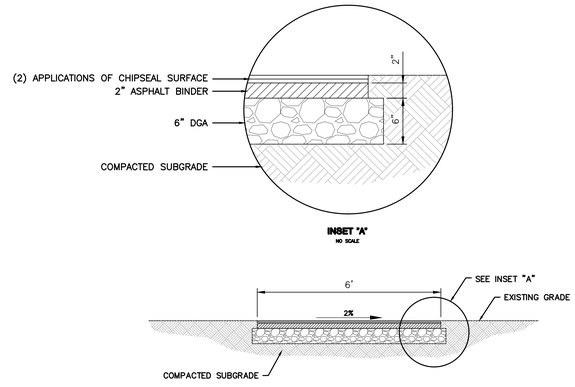

APPLICABLE STATIONS
109+50.00 TO 112+99.00
200+00.00 TO 201+50.00
300+00.00 TO 314+49.19
400+00.00 TO 403+25.00
406+75.00 TO 409+50.00
501+67.00 TO 502+76.17

EXCURSION TRAIL - CHIP SEAL
DETAIL 2
SCALE: NONE — ET SERIES | ET-C3.1

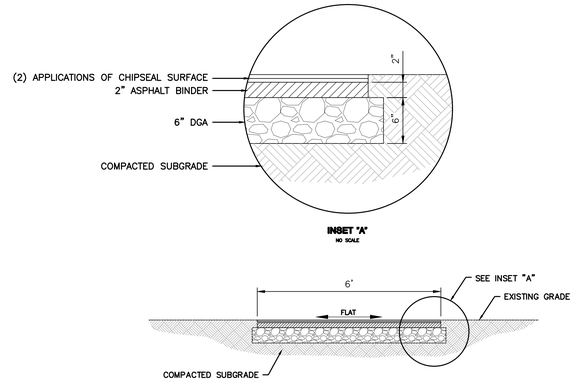

APPLICABLE STATIONS
216+00.00 TO 228+25.69
409+50.00 TO 414+30.00
415+35.50 TO 418+22.10
600+00.00 TO 602+06.88

EXCURSION TRAIL - CHIP SEAL
DETAIL 3
SCALE: NONE — ET SERIES | ET-C3.1

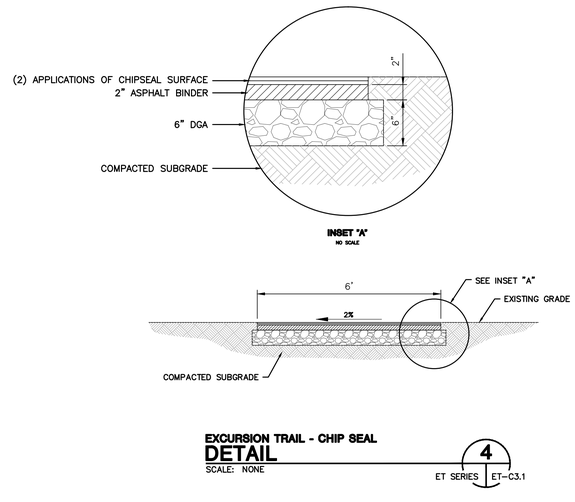

APPLICABLE STATIONS
100+00.00 TO 109+50.00
201+50.00 TO 211+15.00
213+28.50 TO 216+00.00
403+25.00 TO 406+75.00
500+00.00 TO 501+67.00

EXCURSION TRAIL - CHIP SEAL
DETAIL 4
SCALE: NONE — ET SERIES | ET-C3.1

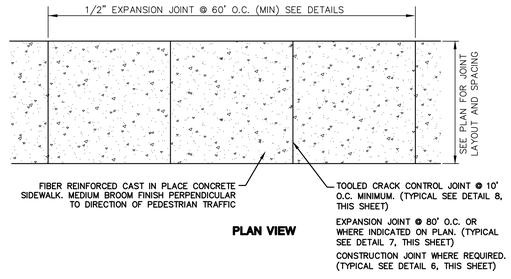

PLAN VIEW

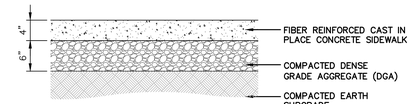

SECTION VIEW

CONCRETE EXCURSION TRAIL
DETAIL 5
SCALE: NONE — ET-C1.2 | ET-C3.1

APPLICABLE STATIONS
211+15.00 TO 213+28.50

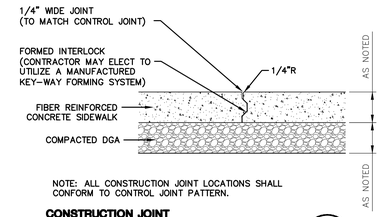

CONSTRUCTION JOINT
DETAIL 6
SCALE: NONE — ET-C1.2 | ET-C3.1

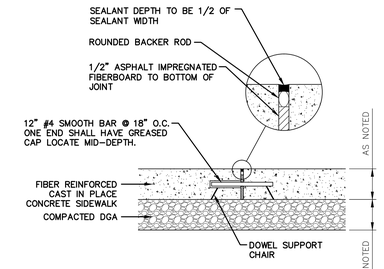

EXPANSION JOINT
DETAIL 7
SCALE: NONE — ET-C1.2 | ET-C3.1

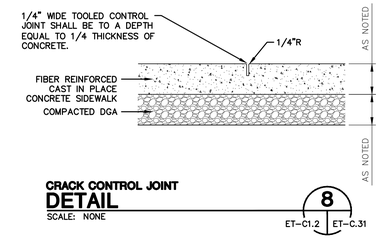

CRACK CONTROL JOINT
DETAIL 8
SCALE: NONE — ET-C1.2 | ET-C.31

Seals

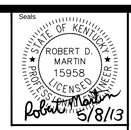

Engineering
Planning
1046 East Chestnut Street, Louisville, Kentucky 40204
Phone: (502) 584-6292 Fax: (502) 584-6918
Kentucky • Indiana • Georgia • Tennessee • Florida

LANDSCAPE ARCHITECT
Wallace Roberts & Todd, LLC
1700 Market Street
28th Floor
Philadelphia, PA 19103
tel 215.732.5215
fax 215.732.2551

Architect
BRAVURA
111 West Washington Street
Louisville, Kentucky 40202
T: (502) 584-9900
F: (502) 584-0829

The Parklands of Floyds Fork, Project 4A
The Strand, Turkey Run Park and Broad Run
Louisville, Kentucky

Owner:
21st Century Parks, Inc.
371 W. Main St., Suite 202
Louisville, Kentucky 40202

REV #	DATE	DESCRIPTION
2	05-30-2013	Addendum#2: Add Applicable Stations/Slopes, 8" Concrete Detail.

Job No: 12300.4AC
Date: May 8, 2013
Scale:
Drawn By:
BID SET

Drawing Title:
Parklands of Floyds Fork
PROJECT 4A Excursion Trail Details

Drawing No:
ET-C3.1

May 30, 2013 - 8:47am
C:\Users\User.Pw-NT\appdata\local\temp\AcePublish_4892\123004AC-DTL-ET.dwg (ET-C3.1)

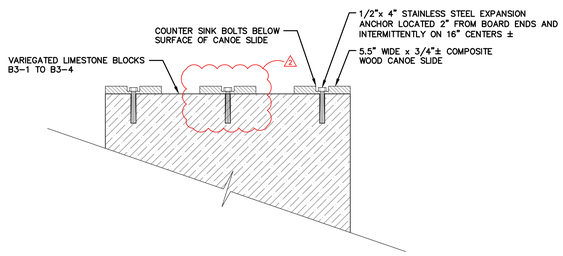

CANOE SLIDE
DETAIL
SCALE: NONE

1
SV-C6.3

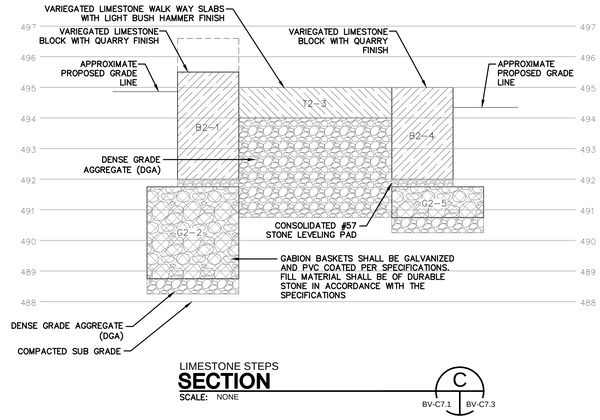

LIMESTONE STEPS
SECTION
SCALE: NONE

C
BV-C7.1 | BV-C7.3

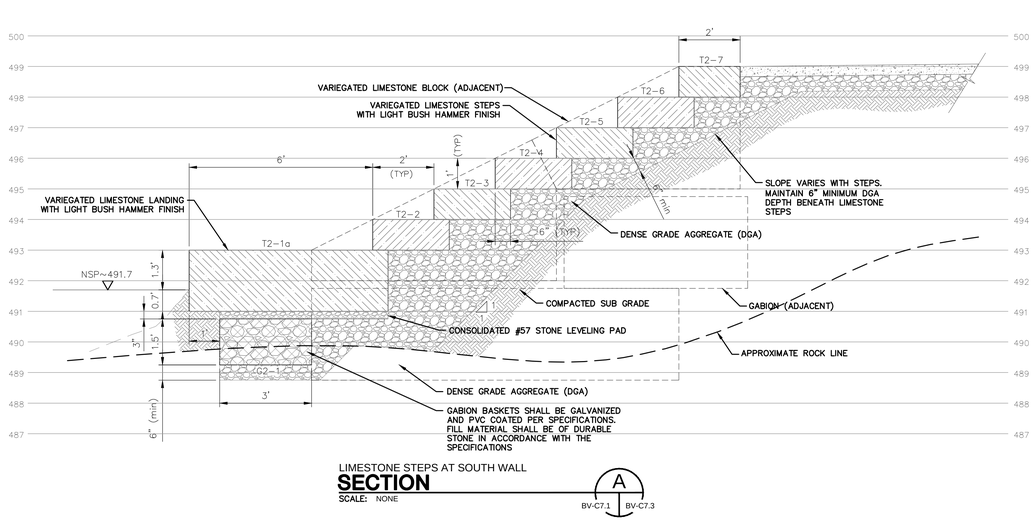

LIMESTONE STEPS AT SOUTH WALL
SECTION
SCALE: NONE

A
BV-C7.1 | BV-C7.3

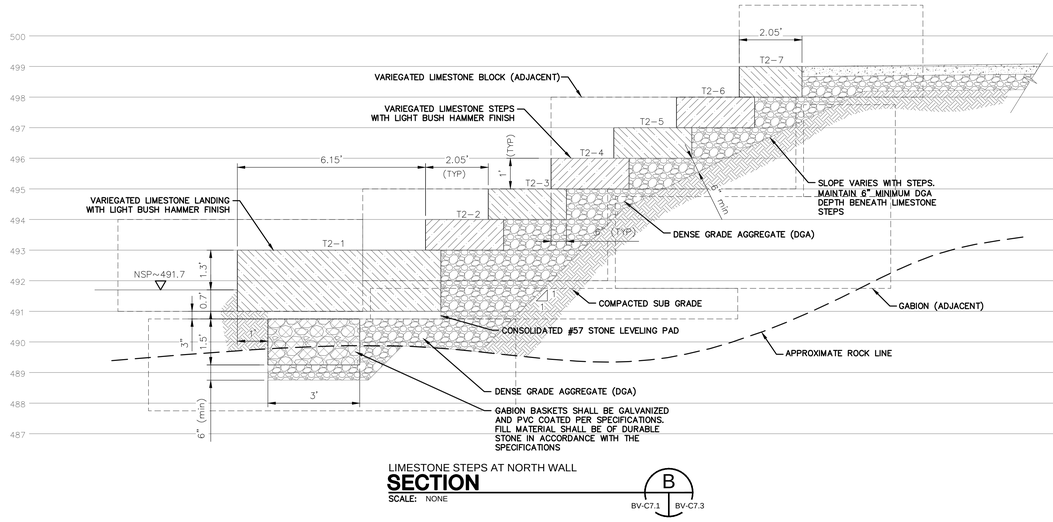

LIMESTONE STEPS AT NORTH WALL
SECTION
SCALE: NONE

B
BV-C7.1 | BV-C7.3

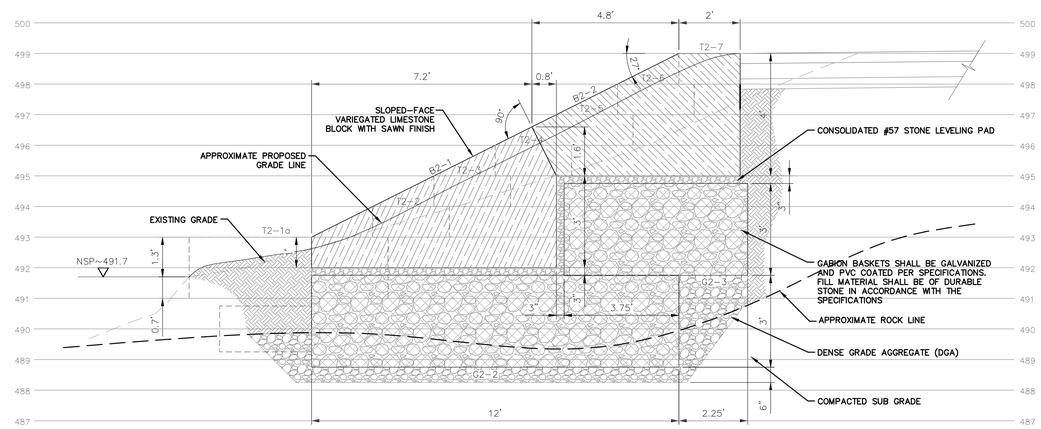

LIMESTONE BLOCKS AT SOUTH WALL
SECTION
SCALE: NONE

A
BV-C7.1 | BV-C7.3

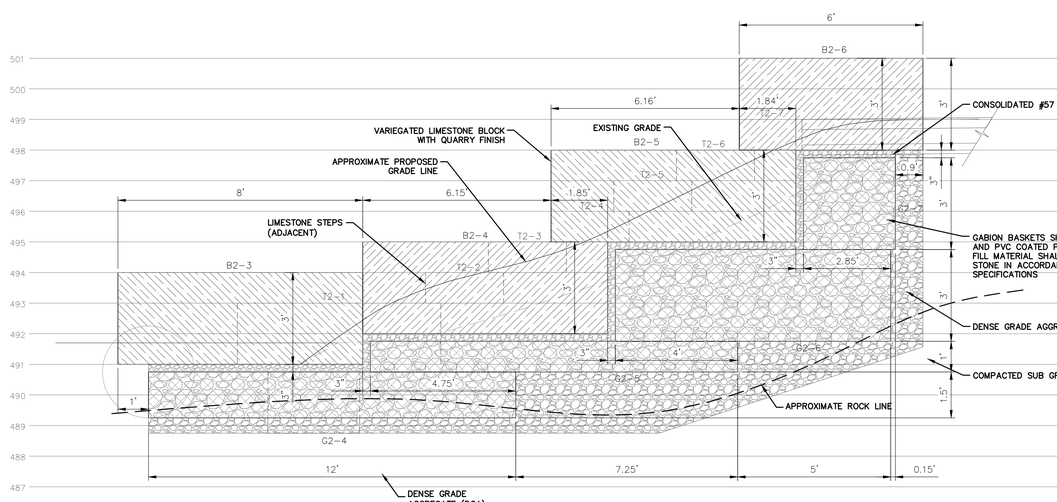

LIMESTONE BLOCKS AT NORTH WALL
SECTION
SCALE: NONE

B
BV-C7.1 | BV-C7.3

Seals

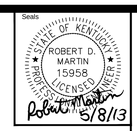

Engineering
Planning
1046 East Chestnut Street, Louisville, Kentucky 40204
502.584.6922 • www.qkpartners.com
Kentucky • Indiana • Georgia • Tennessee • Florida

LANDSCAPE ARCHITECT
WRT
Wallace Roberts & Todd, LLC
1700 Market Street
28th Floor
Philadelphia, PA 19103
tel 215.732.5215
fax 215.732.2551

Architect
BRAVURA
111 West Washington Street
Louisville, Kentucky 40202
T: (502) 584-9900
F: (502) 584-0829

The Parklands of Floyds Fork, Project 4A
The Strand, Turkey Run Park and Broad Run
Louisville, Kentucky

Owner:
21st Century Parks, Inc.
371 W. Main St., Suite 202
Louisville, Kentucky 40202

REV #	DATE	DESCRIPTION
2	05-30-2013	Addendum#2: Revised canoe slide detail

Job No: 12300.4AC
Date: May 8, 2013
Scale: 1" = 2'
Drawn By:

BID SET

Drawing Title:
Parklands of Floyds Fork
Seaton Valley PROJECT 4A Canoe Launch Sections

Drawing No:
SV-C6.3

May. 30, 2013 - 11:10am
C:\Users\Vlad.Vasilenko\Vcon\temp\AcPublish_5944\12300AC-002-STE.dwg (SV-C6.3)

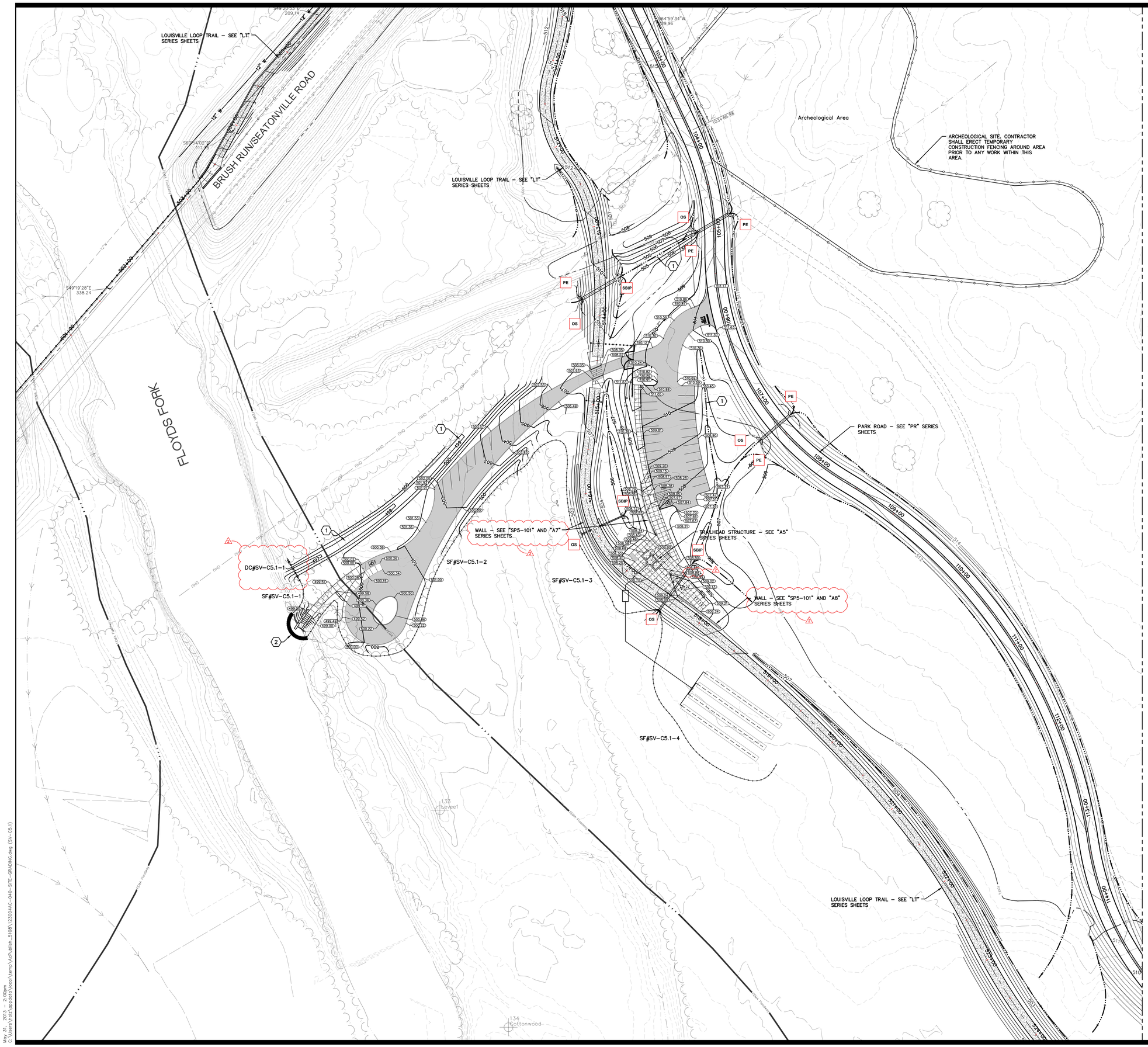

KEYNOTES (not all keynotes used this sheet)

1. CONSTRUCT CONTOURED–BOTTOM SOD SWALE WHERE INDICATED ON PLAN AND PER DETAIL 1, SHEET C9.2.
2. CONTRACTOR SHALL INSTALL COFFERDAM AS NECESSARY TO FACILITATE CANOE LAUNCH CONSTRUCTION. COORDINATE WITH GENERAL SWPPP NOTES, SHEET G0.12. CONTRACTOR SHALL WORK WITH THE MSD INSPECTOR AND DEVISE A COFFER DAM SYSTEM AND IMPLEMENTATION PLAN AND SUBMIT TO OWNER'S ENGINEER FOR REVIEW IN THE FORM OF A SHOP DRAWING SUBMITTAL PRIOR TO ANY CONSTRUCTION.
3. INSTALL SILO CENTER BASIN WHERE INDICATED ON PLAN AND PER DETAIL 14, SHEET C9.1. COORDINATE WITH PIPE AND STRUCTURE SUMMARY SHEETS.
4. MOWN LAWN TRAIL – GRADE THE SILO CENTER MOUND TO CREATE A BENCH TO ACCOMMODATE THE MOWN LAWN TRAIL AS INDICATED ON PLAN. SEED AREA WITH MOWN LAWN MIX. SEED ALL REMAINING AREAS OF THE SILO CENTER MOUND WITH WILDFLOWER MEADOW MIX – DRY.
5. PORCH LAWN – GRADE AREA AS INDICATED ON PLAN. SEED WITH MOWN LAWN MIX.
6. INSTALL 20'(long) x 4'(wide) SCOUR STOP AT END OF FLUME / CURB DEPRESSION WHERE INDICATED ON PLAN AND PER DETAIL 2, SHEET C9.2.

GENERAL NOTES

A. SEE C3 SERIES SHEETS FOR ALL PIPE AND STRUCTURE INFORMATION.

B. COORDINATE WITH GENERAL SWPPP NOTES FOR LINEAR CONSTRUCTION ON SHEET G0.12 FOR EROSION CONTROL MEASURES PERTAINING TO PARK ROAD, LOUISVILLE LOOP AND EXCURSION TRAIL CONSTRUCTION.

C. SEE PR–SERIES PLANS FOR ALL ROADSIDE DITCH INFORMATION.

D. SEE LT–SERIES PLANS FOR ALL TRAILSIDE DITCH INFORMATION.

E. SEE G0.12 FOR SEEDING MIXTURES AND AREAS OF APPLICATION.

SWPPP PHASING

A. INSTALL SILT FENCE SF#SV–C5.1–1, SF#SV–C5.1–2, SF#SV–C5.1–3 AND SF#SV–C5.1–4 AROUND TRAIL HEAD AND CANOE LAUNCH.

B. PERFORM SITE CLEARING OPERATIONS AS REQUIRED TO FACILITATE CONSTRUCTION

C. ROUGH GRADE AREA OF TRAIL HEAD AND CANOE LAUNCH.

D. INSTALL STORM PIPES AND SCOUR STOP DEVICES.

E. INSTALL STONE BAG INLET PROTECTION.

F. GRADE DITCH ADJACENT TO CANOE LAUNCH.

G. INSTALL ROCK DITCH CHECK DC#SV–5.1–1.

H. ROCK ALL DISTURBED AREAS TO RECEIVE PAVEMENT.

I. INSTALL COFFERDAM (IF NECESSARY DEPENDING UPON WATER LEVEL OF FLOYDS FORK AND ANTICIPATED WEATHER AND CONSTRUCTION DURATION.

J. CONSTRUCT CANOE LAUNCH WORKING FROM FLOYDS FORK INLAND.

K. ESTABLISH FINAL GRADE SURROUNDING CANOE LAUNCH.

L. STABILIZE DISTURBED AREA IMMEDIATELY SURROUNDING CANOE LAUNCH AND / OR INSTALL BIO ENGINEERING MEASURES SURROUNDING CANOE LAUNCH.

M. INSTALL UTILITIES TO TRAIL HEAD

N. CONSTRUCT TRAIL HEAD

O. CONSTRUCT SIDEWALKS AND CONCRETE CURBS

P. FINAL GRADE AREA SURROUNDING TRAIL HEAD AND STABILIZE WITH APPROPRIATE SEED MIX(S).

Q. CONSTRUCT ASPHALT PAVEMENT.

R. CLEAN EVERY TWO WEEKS AND AFTER EACH RAINFALL EVENT OF 0.5" OR GREATER.

S. REMOVE ALL BMPs AFTER SITE IS STABILIZED.

T. NOT ALL BMP"s DEPICTED ON THIS SHEET ARE INCLUDED IN THE SWPPP PHASING NOTES ABOVE. COORDINATE WITH "PR" SERIES SHEETS AND "LT" SERIES SHEETS FOR ADDITIONAL BMP's AND SWPPP PHASING NOTES

BMP LEGEND

- SBIP — STONE BAG INLET PROTECTION EF–03/05/06–02
- TGCE — TEMPORARY GRAVEL CONST. ENTRANCE/EXIT ER–01–02
- OS — SCOUR STOP PAD OUTLET STABILIZATION
- PE — PIPE INLET PROTECTION PER DETAIL 1, SHEET G0.13.
- SF#X — REINFORCED SILT FENCE EF–10–02
- DC#X — ROCK DITCH CHECK EB–03–01
- TEMPORARY COFFER DAM
- PUMP AROUND FLOW DIVERSION ED–01–01

Seals

STATE OF KENTUCKY — ROBERT D. MARTIN — 15958 — LICENSED PROFESSIONAL ENGINEER — 5/8/13

Engineering
Planning
1046 East Chestnut Street, Louisville, Kentucky 40204
502.584.6760 www.qkpsc.com
Kentucky • Indiana • Georgia • Tennessee • Florida

LANDSCAPE ARCHITECT
WRT
Wallace Roberts & Todd, LLC
1700 Market Street
28th Floor
Philadelphia, PA 19103
tel 215.732.5215
fax 215.732.2551

Architect
BRAVURA
111 West Washington Street
Louisville, Kentucky 40202
T: (502) 584-9900
F: (502) 584-0829

The Parklands of Floyds Fork, Project 4A

The Strand, Turkey Run Park and Broad Run
Louisville, Kentucky

Owner:
21st Century Parks, Inc.
371 W. Main St., Suite 202
Louisville, Kentucky 40202

REV #	DATE	DESCRIPTION
2	05-30-2013	Addendum2. Rev. wall ref., spot elevation values, MSD comments

Job No: 12300.4AC
Date: May 8, 2013
Scale: 1" = 40'
Drawn By:

BID SET

Drawing Title:
Parklands of Floyds Fork
Seaton Valley PROJECT 4A T.H. and C.L. Grading, Drainage and SWPPP

Drawing No:
SV-C5.1

May 31, 2013 – 2:09pm
C:\Users\Vlad\Upstairs\Work\Terra\AcPublish_5108\12300.4AC-040-SITE_GRADING.dwg (SV-C5.1)

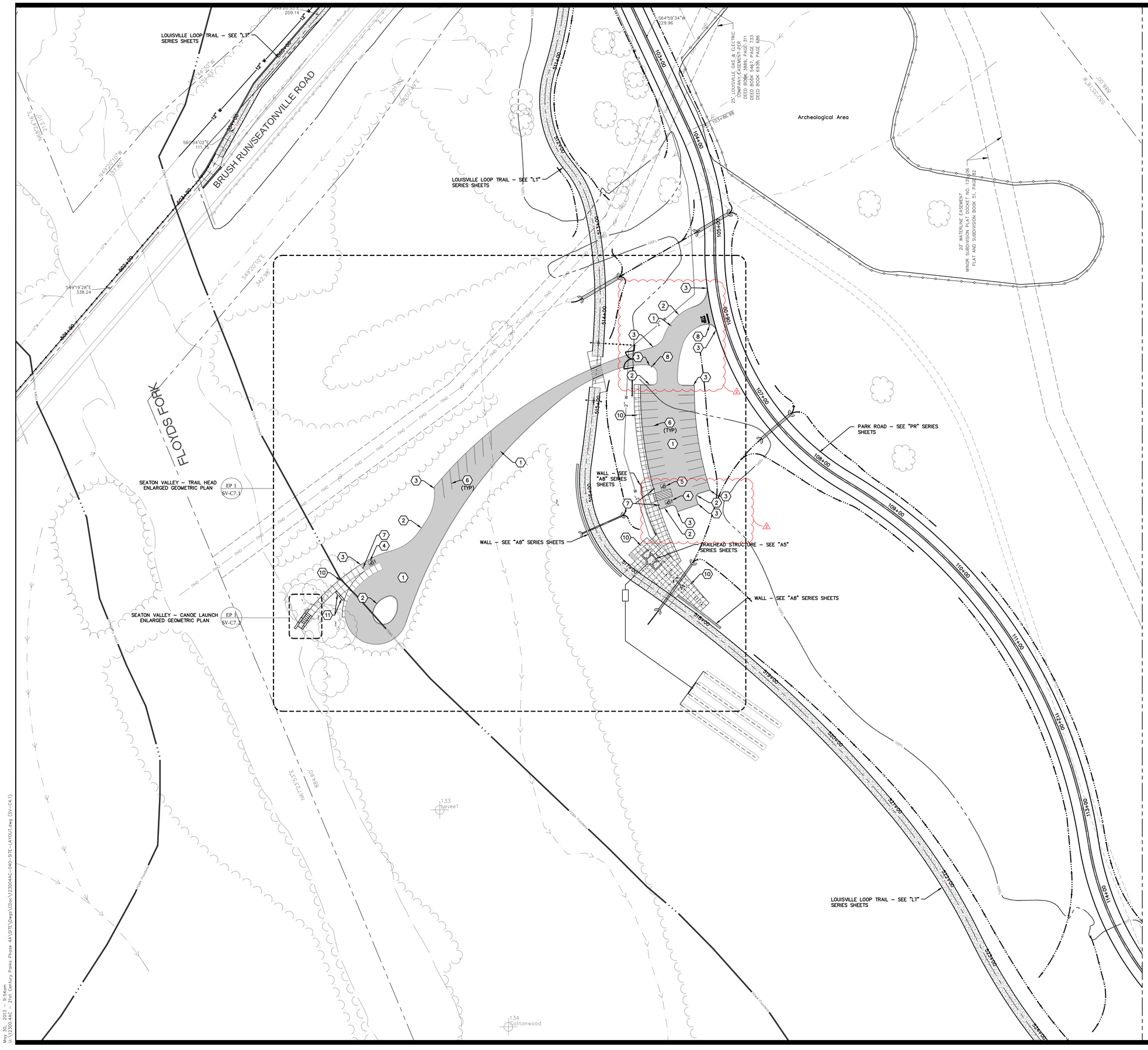

KEYNOTES (not all keynotes used this sheet)

1. CONSTRUCT ASPHALT PAVEMENT TO LIMITS INDICATED ON PLAN AND PER DETAIL 1, SHEET C9.1.
2. CONSTRUCT CONCRETE HEADER CURB TO LIMITS INDICATED ON PLAN AND PER DETAIL 4, SHEET C9.1.
3. CONSTRUCT CONCRETE CURB TAPER WHERE INDICATED ON PLAN AND PER DETAIL 5, SHEET C9.1.
4. "VAN ACCESSIBLE" PARKING STALL STRIPING – COORDINATE WITH "RS" SERIES SHEETS.
5. STANDARD ACCESSIBLE PARKING STALL STRIPING – COORDINATE WITH "RS" SERIES SHEETS.
6. PARKING STALL STRIPING – COORDINATE WITH "RS" SERIES SHEETS.
7. HANDICAP PARKING SIGN – COORDINATE WITH "RS" SERIES SHEETS.
8. STOP SIGN – COORDINATE WITH "RS" SERIES SHEETS.
9. "STOP" AND STOP BAR – COORDINATE WITH "RS" SERIES SHEETS.
10. CONSTRUCT CONCRETE SIDEWALK TO LIMITS INDICATED ON PLAN AND PER DETAIL 6, SHEET C9.1.
11. INSTALL LIMESTONE BENCH SEATING WHERE INDICATED ON PLAN AND PER DETAIL 7, SHEET C9.1.
12. INSTALL TEMPORARY CONSTRUCTION FENCE WHERE INDICATED ON PLAN. INSTALL FENCE PRIOR TO ANY NEW CONSTRUCTION OR LAND DISTURBING ACTIVITY.
13. CONSTRUCT CONCRETE FLUME WHERE INDICATED ON PLAN AND PER DETAIL 8, SHEET C9.1.
14. CONSTRUCT CONCRETE CURB BREAK WHERE INDICATED ON PLAN AND PER DETAIL 12, SHEET C9.1.
15. INSTALL FORD CROSSING WHERE INDICATED ON PLAN AND PER DETAIL 13, SHEET C9.1.
16. INSTALL 12' WIDE GRASSY PAVER ACCESS DRIVE (MAINTENANCE AND SERVICE VEHICLES) WHERE INDICATED ON PLAN AND PER DETAIL 5, SHEET 9.2.

Seals

STATE OF KENTUCKY
ROBERT D. MARTIN
15958
LICENSED
PROFESSIONAL ENGINEER
5/8/13

Engineering
Planning
1046 East Chestnut Street, Louisville, Kentucky 40204
(502) 584-6858 • Fax (502) 584-6866
Kentucky • Indiana • Georgia • Tennessee • Florida

LANDSCAPE ARCHITECT
WRT
Wallace Roberts & Todd, LLC
1700 Market Street
28th Floor
Philadelphia, PA 19103
tel 215.732.5215
fax 215.732.2551

Architect
BRAVURA
111 West Washington Street
Louisville, Kentucky 40202
T: (502) 584-9900
F: (502) 584-0829

The Parklands of Floyds Fork, Project 4A

The Strand, Turkey Run Park and Broad Run
Louisville, Kentucky

Owner:
21st Century Parks, Inc.
371 W. Main St., Suite 202
Louisville, Kentucky 40202

REV #	DATE	DESCRIPTION
2	05-30-2013	Addendum #2: Clarified limits of concrete curb

Job No:	12300.4AC
Date:	May 8, 2013
Scale:	1" = 40'
Drawn By:	

BID SET

Drawing Title:

Parklands of Floyds Fork

Seaton Valley PROJECT 4A Trail Head and Canoe Launch Layout

Drawing No:

SV-C4.1

0 40' 80'

May 30, 2013 – 9:54am
J:\12300.4AC – 21st Century Parks Phase 4A\SITE\Dwgs\Cdocs\12300AC–840–SITE–LAYOUT.dwg (SV–C4.1)

KEYNOTES (not all keynotes used this sheet)

1. SAWCUT AND REMOVE EXISTING ASPHALT PAVEMENT TO LIMITS INDICATED ON PLAN. COORDINATE WITH LIMITS OF PROPOSED WORK.
2. REMOVE EXISTING GRAVEL ROAD TO LIMITS INDICATED ON PLAN. COORDINATE WITH LIMITS OF PROPOSED WORK.
3. CLEAR AND GRUB EXISTING VEGETATION TO LIMITS INDICATED ON PLAN. COORDINATE WITH LIMITS OF PROPOSED WORK.
4. REMOVE EXISTING FENCE COMPLETELY. FILL RESULTING HOLES WITH EARTH COMPACTED IN 6" LIFTS UNTIL FLUSH WITH ADJACENT GRADE.
5. EXISTING CONSTRUCTION HAUL ROAD (CONSTRUCTED BY PHASE 3A CONTRACTOR) SHALL BE UTILIZED FOR EXCURSION TRAIL ALIGNMENT.
6. REMOVE EXISTING VEHICULAR GUARD RAIL TO LIMITS SHOW ON PLAN. COORDINATE WITH PROPOSED WORK.
7. REMOVE BARN OR FEATURE IN ITS ENTIRETY, INCLUDING STRUCTURE, FLOORS, FOUNDATIONS, ETC.
8. REMOVE FLOORS, SLABS AND FOUNDATION ONLY. REMOVAL AND SALVAGE BARN OR ABOVE-GROUND STRUCTURES AND STORE IN THE IMMEDIATE ADJACENT TOBACCO BARD.
9. COORDINATE THE REMOVAL OF EXISTING OVERHEAD ELECTRIC FACILITIES WITH ELECTRICAL SITE PLANS "UE" SERIES SHEETS.
10. EXISTING GRAVEL DRIVE TO REMAIN. CONTRACTOR SHALL UTILIZE EXISTING AS BASE FOR NEW LOUISVILLE LOOP – COORDINATE WITH NEW WORK "LT" SERIES SHEETS.
11. INSTALL TREE PROTECTION FENCING (REINFORCED SILT FENCE PER MSD EF-10-02). COORDINATE WITH TREE PRESERVATION NOTES, SHEET G0.12.
12. INSTALL ORANGE CONSTRUCTION FENCING AROUND ARCHEOLOGICAL / GLADECREST / WETLAND AREAS AS SHOWN ON PLAN PRIOR TO ANY WORK IN PROXIMITY.
13. IN LIEU OF A CONSTRUCTION FENCE, CONTRACTOR SHALL DEMARK LIMITS OF DISTURBANCE WITH PINK SURVEY RIBBON TIED TO FOLIAGE AT INTERVALS OFTEN ENOUGH TO ASCERTAIN LIMITS ALONG THE ALIGNMENT TO LIMITS INDICATED ON PLAN. CONTRACTOR SHALL LIMIT DISTURBANCE AND PRESENCE TO THE FORK-SIDE OF THE ALIGNMENT.
14. REMOVE EXISTING WATER LINE TO LIMITS INDICATED ON PLAN. COORDINATE WITH LAYOUT PLANS AND OR UTILITY SHEETS FOR NEW ALIGNMENT INFORMATION. CONTRACTOR SHALL COORDINATE WITH THE LOUISVILLE WATER COMPANY FOR ALL ASPECTS OF THIS WORK.
15. INSTALL TEMPORARY GRAVEL CONSTRUCTION ENTRANCE AT ACCESS POINTS WHERE SHOWN AND PER MSD STANDARD DRAWING ER-01-02. SEE GENERAL SWPPP NOTES, SHEET G0.13, GRADING PLANS AND MAINTENANCE OF TRAFFIC PLANS FOR ADDITIONAL EROSION CONTROL AND ACCESS INFORMATION.

Seals

STATE OF KENTUCKY — ROBERT D. MARTIN 15958 LICENSED PROFESSIONAL ENGINEER
Robert D. Martin 5/8/13

MATCH LINE – SEE SHEET SV-2.1
MATCH LINE – SEE SHEET ST-2.7

MATCH LINE – SEE SHEET SH-2.1
MATCH LINE – SEE SHEET SV-2.1

0 100' 200'

Engineering
Planning

1046 East Chestnut Street, Louisville, Kentucky 40204
502.584.7222 www.qkpartners.com
Kentucky • Indiana • Georgia • Tennessee • Florida

LANDSCAPE ARCHITECT
WRT
Wallace Roberts & Todd, LLC
1700 Market Street
28th Floor
Philadelphia, PA 19103
tel 215.732.5215
fax 215.732.2551

Architect
BRAVURA
111 West Washington Street
Louisville, Kentucky 40202
T: (502) 584-9900
F: (502) 584-0829

The Parklands of Floyds Fork, Project 4A
The Strand, Turkey Run Park and Broad Run
Louisville, Kentucky

Owner:
21st Century Parks, Inc.
371 W. Main St., Suite 202
Louisville, Kentucky 40202

REV #	DATE	DESCRIPTION
2	05-30-2013	Addendum #2: Sheet Reissued Whole

Job No:	12300.4AC
Date:	May 8, 2013
Scale:	1" = 100'
Drawn By:	

BID SET

Drawing Title:
Parklands of Floyds Fork
Seaton Valley PROJECT 4A Demolition and Tree Preservaton

Drawing No:
SV-C2.1

May, 31, 2013 – 2:08pm
C:\Users\Tyler.Pal-NT\Vaporstock\Local\Temp\AcPublish_5964\12300.4AC – 100 - DEMOLITION.dwg (SV-C2.1)

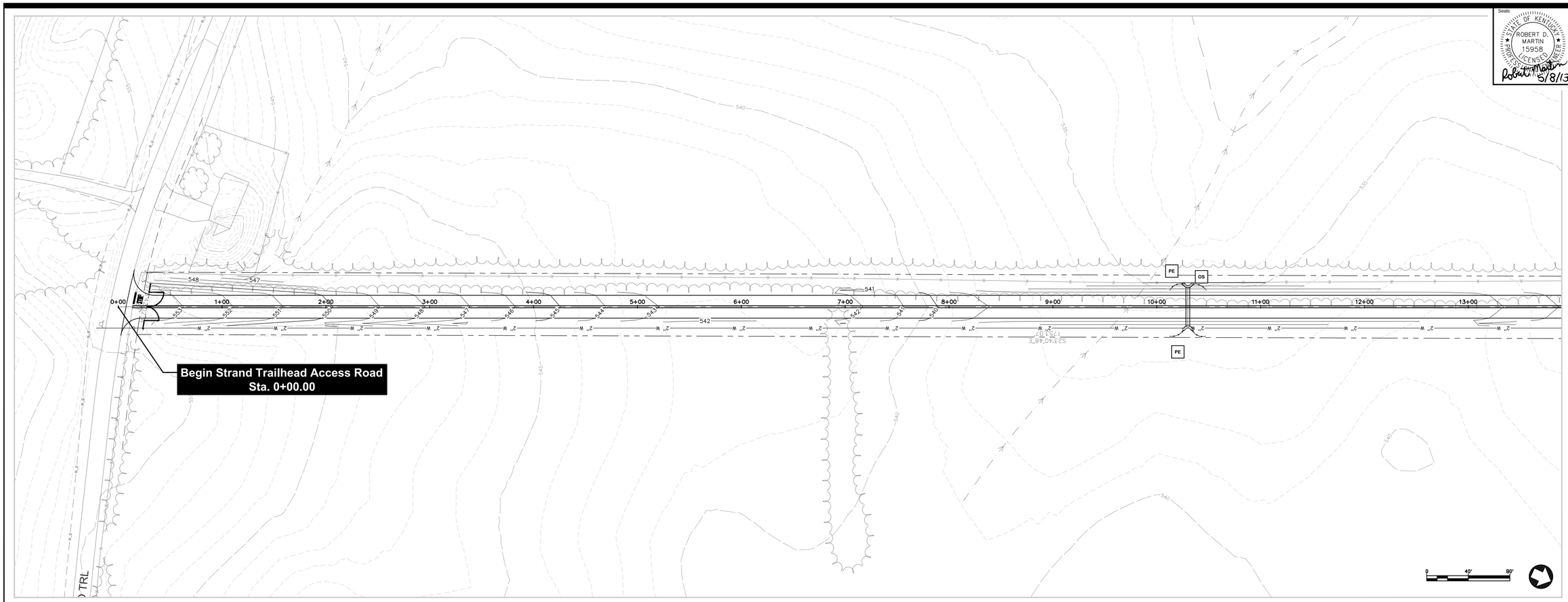

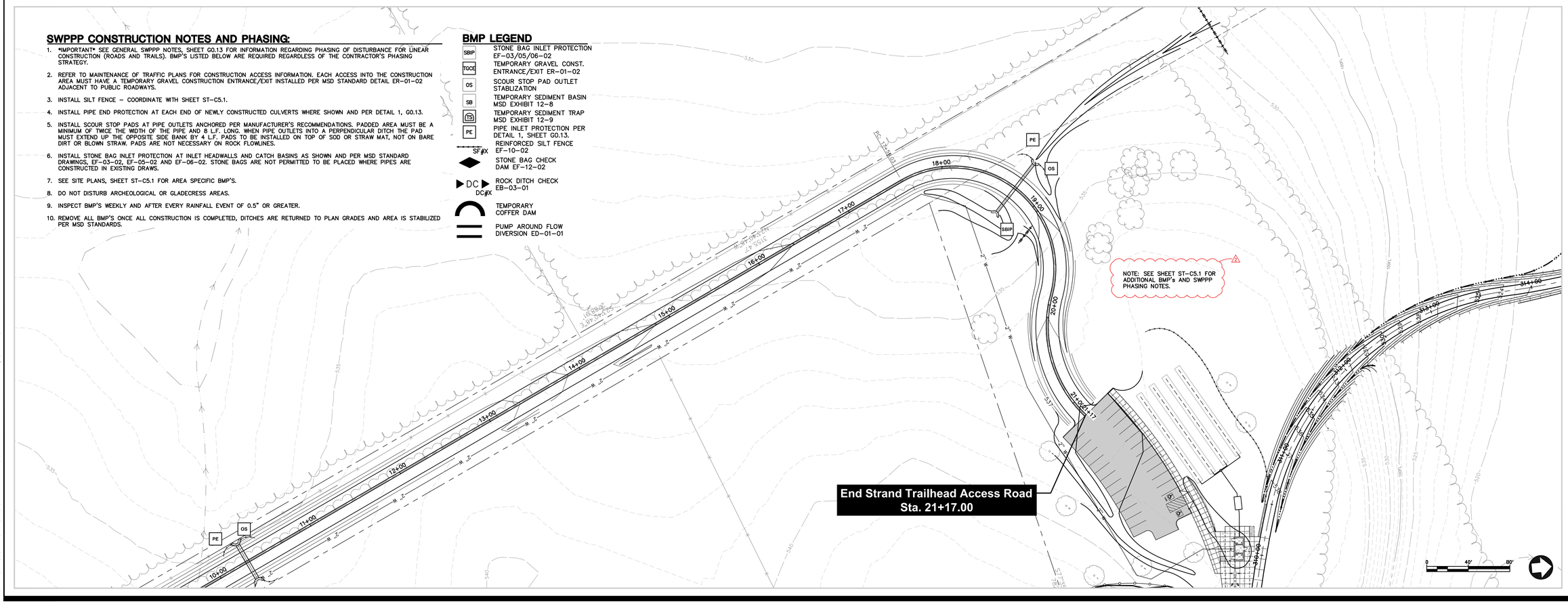

SWPPP CONSTRUCTION NOTES AND PHASING:

1. *IMPORTANT* SEE GENERAL SWPPP NOTES, SHEET G0.13 FOR INFORMATION REGARDING PHASING OF DISTURBANCE FOR LINEAR CONSTRUCTION (ROADS AND TRAILS). BMP'S LISTED BELOW ARE REQUIRED REGARDLESS OF THE CONTRACTOR'S PHASING STRATEGY.
2. REFER TO MAINTENANCE OF TRAFFIC PLANS FOR CONSTRUCTION ACCESS INFORMATION. EACH ACCESS INTO THE CONSTRUCTION AREA MUST HAVE A TEMPORARY GRAVEL CONSTRUCTION ENTRANCE/EXIT INSTALLED PER MSD STANDARD DETAIL ER-01-02 ADJACENT TO PUBLIC ROADWAYS.
3. INSTALL SILT FENCE – COORDINATE WITH SHEET ST-C5.1.
4. INSTALL PIPE END PROTECTION AT EACH END OF NEWLY CONSTRUCTED CULVERTS WHERE SHOWN AND PER DETAIL 1, G0.13.
5. INSTALL SCOUR STOP PADS AT PIPE OUTLETS ANCHORED PER MANUFACTURER'S RECOMMENDATIONS. PADDED AREA MUST BE A MINIMUM OF TWICE THE WIDTH OF THE PIPE AND 8 L.F. LONG. WHEN PIPE OUTLETS INTO A PERPENDICULAR DITCH THE PAD MUST EXTEND UP THE OPPOSITE SIDE BANK BY 4 L.F. PADS TO BE INSTALLED ON TOP OF SOD OR STRAW MAT, NOT ON BARE DIRT OR BLOWN STRAW. PADS ARE NOT NECESSARY ON ROCK FLOWLINES.
6. INSTALL STONE BAG INLET PROTECTION AT INLET HEADWALLS AND CATCH BASINS AS SHOWN AND PER MSD STANDARD DRAWINGS, EF-03-02, EF-05-02 AND EF-06-02. STONE BAGS ARE NOT PERMITTED TO BE PLACED WHERE PIPES ARE CONSTRUCTED IN EXISTING DRAWS.
7. SEE SITE PLANS, SHEET ST-C5.1 FOR AREA SPECIFIC BMP'S.
8. DO NOT DISTURB ARCHEOLOGICAL OR GLADECRESS AREAS.
9. INSPECT BMP'S WEEKLY AND AFTER EVERY RAINFALL EVENT OF 0.5" OR GREATER.
10. REMOVE ALL BMP'S ONCE ALL CONSTRUCTION IS COMPLETED, DITCHES ARE RETURNED TO PLAN GRADES AND AREA IS STABILIZED PER MSD STANDARDS.

BMP LEGEND

SBIP	STONE BAG INLET PROTECTION EF-03/05/06-02
TGCE	TEMPORARY GRAVEL CONST. ENTRANCE/EXIT ER-01-02
OS	SCOUR STOP PAD OUTLET STABLIZATION
SB	TEMPORARY SEDIMENT BASIN MSD EXHIBIT 12-8
TSB	TEMPORARY SEDIMENT TRAP MSD EXHIBIT 12-9
PE	PIPE INLET PROTECTION PER DETAIL 1, SHEET G0.13.
SF#X	REINFORCED SILT FENCE EF-10-02
	STONE BAG CHECK DAM EF-12-02
DC DC#X	ROCK DITCH CHECK EB-03-01
	TEMPORARY COFFER DAM
	PUMP AROUND FLOW DIVERSION ED-01-01

Seals

STATE OF KENTUCKY
ROBERT D. MARTIN
15958
PROFESSIONAL ENGINEER
LICENSED
5/8/13

Engineering
Planning

1046 East Chestnut Street, Louisville, Kentucky 40204
Phone: 502-585-2222 Internet: www.qk4.com
Kentucky • Indiana • Georgia • Tennessee • Florida

LANDSCAPE ARCHITECT

Wallace Roberts & Todd, LLC
1700 Market Street
28th Floor
Philadelphia, PA 19103
tel 215.732.5215
fax 215.732.2551

Architect

BRAVURA
111 West Washington Street
Louisville, Kentucky 40202
T: (502) 584-9900
F: (502) 584-0929

The Parklands of Floyds Fork, Project 4A

The Strand, Turkey Run Park and Broad Run
Louisville, Kentucky

Owner:
21st Century Parks, Inc.
311 W. Main St., Suite 202
Louisville, Kentucky 40202

REV #	DATE	DESCRIPTION
2	05-30-2013	Addendum 2, MSD Comments

Job No: 12300.4AC
Date: May 8, 2013
Scale: H 1" = 40' V 1" = 40'
Drawn By:

BID SET

Drawing Title:

Parklands of Floyds Fork

PROJECT 4A
Trailhead Access Grading Plans
Sta. 0+00 to END

Drawing No:

ST-C7.5

May 30, 2013 – 3:47pm
C:\Users\Vince Oppedisano\Documents\LiveContent\Publication_5\108\12104 LIN-ROAD AND TRAIL GD-3.dwg (ST-C7.5)



Seals

STATE OF KENTUCKY — ROBERT D. MARTIN — 15958 — LICENSED PROFESSIONAL ENGINEER — 5/8/13

KEYNOTES (not all keynotes used this sheet)

1. CONSTRUCT CONTOURED-BOTTOM SOD SWALE WHERE INDICATED ON PLAN AND PER DETAIL 1, SHEET C9.2.
2. CONTRACTOR SHALL INSTALL COFFERDAM AS NECESSARY TO FACILITATE CANOE LAUNCH CONSTRUCTION. COORDINATE WITH GENERAL SWPPP NOTES, SHEET G0.12. CONTRACTOR SHALL WORK WITH THE MSD INSPECTOR AND DEVISE A COFFER DAM SYSTEM AND IMPLEMENTATION PLAN AND SUBMIT TO OWNER'S ENGINEER FOR REVIEW IN THE FORM OF A SHOP DRAWING SUBMITTAL PRIOR TO ANY CONSTRUCTION.
3. INSTALL SILO CENTER BASIN WHERE INDICATED ON PLAN AND PER DETAIL 14, SHEET C9.1. COORDINATE WITH PIPE AND STRUCTURE SUMMARY SHEETS.
4. MOWN LAWN TRAIL – GRADE THE SILO CENTER MOUND TO CREATE A BENCH TO ACCOMMODATE THE MOWN LAWN TRAIL AS INDICATED ON PLAN. SEED AREA WITH MOWN LAWN MIX. SEED ALL REMAINING AREAS OF THE SILO CENTER MOUND WITH WILDFLOWER MEADOW MIX – DRY.
5. PORCH LAWN – GRADE AREA AS INDICATED ON PLAN. SEED WITH MOWN LAWN MIX.
6. INSTALL 20'(long) x 4'(wide) SCOUR STOP AT END OF FLUME / CURB DEPRESSION WHERE INDICATED ON PLAN AND PER DETAIL 2, SHEET C9.2.

GENERAL NOTES

A. SEE C3 SERIES SHEETS FOR ALL PIPE AND STRUCTURE INFORMATION.
B. COORDINATE WITH GENERAL SWPPP NOTES FOR LINEAR CONSTRUCTION ON SHEET G0.12 FOR EROSION CONTROL MEASURES PERTAINING TO PARK ROAD, LOUISVILLE LOOP AND EXCURSION TRAIL CONSTRUCTION.
C. SEE PR-SERIES PLANS FOR ALL ROADSIDE DITCH INFORMATION.
D. SEE LT-SERIES PLANS FOR ALL TRAILSIDE DITCH INFORMATION.
E. SEE G0.12 FOR SEEDING MIXTURES AND AREAS OF APPLICATION.

SWPPP PHASING

A. PERFORM SITE CLEARING OPERATIONS AS REQUIRED TO FACILITATE CONSTRUCTION.
B. INSTALL SILT FENCE SF#SH-C5.1-1.
C. CONSTRUCT DITCHES.
D. INSTALL ROCK DITCH CHECK, DC#SH-C5.1-1 AND DC#SH-C5.1-2.
E. BRING TRAIL HEAD AREA UP TO ROUGH GRADE.
F. INSTALL STORM CULVERT PIPES.
G. INSTALL STONE BAG INLET PROTECTION.
H. ROCK PARKING AREA.
I. INSTALL RETAINING WALL,
J. FINAL GRADE AND STABILIZE DISTURBED AREAS WITH APPROPRIATE SEED MIX.
K. INSTALL CONCRETE SIDEWALK AND CONCRETE CURBS.
L. CONSTRUCT TRAILHEAD/KIOSK STRUCTURE.
M. INSTALL ASPHALT PAVEMENT.
N. CLEAN EVERY TWO WEEKS AND AFTER EACH RAINFALL EVENT OF 0.5" OR GREATER.
O. REMOVE ALL BMPs AFTER SITE IS STABILIZED.

BMP LEGEND

- SBIP — STONE BAG INLET PROTECTION EF-03/05/06-02
- TGCE — TEMPORARY GRAVEL CONST. ENTRANCE/EXIT ER-01-02
- OS — SCOUR STOP PAD OUTLET STABILIZATION
- PE — PIPE INLET PROTECTION PER DETAIL 1, SHEET G0.13.
- SF#X — REINFORCED SILT FENCE EF-10-02
- DC / DC#X — ROCK DITCH CHECK EB-03-01
- TEMPORARY COFFER DAM
- PUMP AROUND FLOW DIVERSION ED-01-01

Engineering
Planning
1046 East Chestnut Street, Louisville, Kentucky 40204
502.584.6300 www.qkpartners.com
Kentucky • Indiana • Georgia • Tennessee • Florida

LANDSCAPE ARCHITECT
Wallace Roberts & Todd, LLC
1700 Market Street
28th Floor
Philadelphia, PA 19103
tel 215.732.5215
fax 215.732.2551

Architect
BRAVURA
111 West Washington Street
Louisville, Kentucky 40202
T: (502) 584-9900
F: (502) 584-0829

The Parklands of Floyds Fork, Project 4A

The Strand, Turkey Run Park and Broad Run
Louisville, Kentucky

Owner:
21st Century Parks, Inc.
371 W. Main St., Suite 202
Louisville, Kentucky 40202

REV #	DATE	DESCRIPTION
2	05-30-2013	Addendum2: Entire Sheet is part of Add-Alt No.2. MSD Comments

Job No: 12300.4AC
Date: May 8, 2013
Scale: 1" = 40'
Drawn By:
BID SET

Drawing Title:
Parklands of Floyds Fork
The Strand PROJECT 4A Trail Head Grading,Drainage and SWPPP

Drawing No:
ST-C5.1

May 31, 2013 – 1:59pm
C:\Users\Wood\Documents\Revit Archive\12300.4AC-040-SITE_GRADING.rvt (ST-C5.1)

KEYNOTES (not all keynotes used this sheet)

1. SAWCUT AND REMOVE EXISTING ASPHALT PAVEMENT TO LIMITS INDICATED ON PLAN. COORDINATE WITH LIMITS OF PROPOSED WORK.
2. REMOVE EXISTING GRAVEL ROAD TO LIMITS INDICATED ON PLAN. COORDINATE WITH LIMITS OF PROPOSED WORK.
3. CLEAR AND GRUB EXISTING VEGETATION TO LIMITS INDICATED ON PLAN. COORDINATE WITH LIMITS OF PROPOSED WORK.
4. REMOVE EXISTING FENCE COMPLETELY. FILL RESULTING HOLES WITH EARTH COMPACTED IN 6" LIFTS UNTIL FLUSH WITH ADJACENT GRADE.
5. EXISTING CONSTRUCTION HAUL ROAD (CONSTRUCTED BY PHASE 3A CONTRACTOR) SHALL BE UTILIZED FOR EXCURSION TRAIL ALIGNMENT.
6. REMOVE EXISTING VEHICULAR GUARD RAIL TO LIMITS SHOW ON PLAN. COORDINATE WITH PROPOSED WORK.
7. REMOVE BARN OR FEATURE IN ITS ENTIRETY, INCLUDING STRUCTURE, FLOORS, FOUNDATIONS, ETC.
8. REMOVE FLOORS, SLABS AND FOUNDATION ONLY. REMOVAL AND SALVAGE BARN OR ABOVE-GROUND STRUCTURES AND STORE IN THE IMMEDIATE ADJACENT TOBACCO BARD.
9. COORDINATE THE REMOVAL OF EXISTING OVERHEAD ELECTRIC FACILITIES WITH ELECTRICAL SITE PLANS "UE" SERIES SHEETS.
10. EXISTING GRAVEL DRIVE TO REMAIN. CONTRACTOR SHALL UTILIZE EXISTING AS BASE FOR NEW LOUISVILLE LOOP – COORDINATE WITH NEW WORK "LT" SERIES SHEETS.
11. INSTALL TREE PROTECTION FENCING (REINFORCED SILT FENCE PER MSD EF-10-02). COORDINATE WITH TREE PRESERVATION NOTES, SHEET G0.12.
12. INSTALL ORANGE CONSTRUCTION FENCING AROUND ARCHEOLOGICAL / GLADECREST / WETLAND AREAS AS SHOWN ON PLAN PRIOR TO ANY WORK IN PROXIMITY.
13. IN LIEU OF A CONSTRUCTION FENCE, CONTRACTOR SHALL DEMARK LIMITS OF DISTURBANCE WITH PINK SURVEY RIBBON TIED TO FOLIAGE AT INTERVALS OFTEN ENOUGH TO ASCERTAIN LIMITS ALONG THE ALIGNMENT TO LIMITS INDICATED ON PLAN. CONTRACTOR SHALL LIMIT DISTURBANCE AND PRESENCE TO THE FORK-SIDE OF THE ALIGNMENT.
14. REMOVE EXISTING WATER LINE TO LIMITS INDICATED ON PLAN. COORDINATE WITH LAYOUT PLANS AND OR UTILITY SHEETS FOR NEW ALIGNMENT INFORMATION. CONTRACTOR SHALL COORDINATE WITH THE LOUISVILLE WATER COMPANY FOR ALL ASPECTS OF THIS WORK.
15. INSTALL TEMPORARY GRAVEL CONSTRUCTION ENTRANCE AT ACCESS POINTS WHERE SHOWN AND PER MSD STANDARD DRAWING ER-01-02. SEE GENERAL SWPPP NOTES, SHEET G0.13, GRADING PLANS AND MAINTENANCE OF TRAFFIC PLANS FOR ADDITIONAL EROSION CONTROL AND ACCESS INFORMATION.

MATCH LINE – SEE SHEET ST-2.7

MATCH LINE – SEE SHEET ST-2.6

MATCH LINE – SEE SHEET ST-2.7

Archeological Area

TGCE

Levee1

Cottonwood

Opening

Green

BRUSH RUN ROAD

BRUSH RUN/BEARGRASS ROAD

FLOYDS FORK

SPRINGHILL FARM RD

SPRINGHILL FARM ROAD

SEATONVILLE RD

0 100' 200'

Seals

STATE OF KENTUCKY
ROBERT D. MARTIN
15958
LICENSED
PROFESSIONAL ENGINEER
5/8/13

Engineering
Planning

1046 East Chestnut Street, Louisville, Kentucky 40204
502.584.7200 • Fax 502.584.7227
Kentucky • Indiana • Georgia • Tennessee • Florida

LANDSCAPE ARCHITECT

Wallace Roberts & Todd, LLC
1700 Market Street
28th Floor
Philadelphia, PA 19103
tel 215.732.5215
fax 215.732.2551

Architect

BRAVURA
111 West Washington Street
Louisville, Kentucky 40202
T: (502) 584-9900
F: (502) 584-0829

The Parklands of Floyds Fork, Project 4A

The Strand, Turkey Run Park and Broad Run
Louisville, Kentucky

Owner:
21st Century Parks, Inc.
371 W. Main St., Suite 202
Louisville, Kentucky 40202

REV #	DATE	DESCRIPTION
2	05-30-2013	Addendum #2: Sheet Reissued Whole

Job No:	12300.4AC
Date:	May 8, 2013
Scale:	1" = 100'
Drawn By:	

BID SET

Drawing Title:

Parklands of Floyds Fork

The Strand PROJECT 4A Demolition and Tree Preservation

Drawing No:

ST-C2.7

May 31, 2013 – 2:08pm
C:\Users\Victor.Pan-NT\appdata\local\Temp\AcPublish_5961\12300.4AC-100-DEMOLITION.dwg (ST-C2.7)

KEYNOTES (not all keynotes used this sheet)

1. SAWCUT AND REMOVE EXISTING ASPHALT PAVEMENT TO LIMITS INDICATED ON PLAN. COORDINATE WITH LIMITS OF PROPOSED WORK.
2. REMOVE EXISTING GRAVEL ROAD TO LIMITS INDICATED ON PLAN. COORDINATE WITH LIMITS OF PROPOSED WORK.
3. CLEAR AND GRUB EXISTING VEGETATION TO LIMITS INDICATED ON PLAN. COORDINATE WITH LIMITS OF PROPOSED WORK.
4. REMOVE EXISTING FENCE COMPLETELY. FILL RESULTING HOLES WITH EARTH COMPACTED IN 6" LIFTS UNTIL FLUSH WITH ADJACENT GRADE.
5. EXISTING CONSTRUCTION HAUL ROAD (CONSTRUCTED BY PHASE 3A CONTRACTOR) SHALL BE UTILIZED FOR EXCURSION TRAIL ALIGNMENT.
6. REMOVE EXISTING VEHICULAR GUARD RAIL TO LIMITS SHOW ON PLAN. COORDINATE WITH PROPOSED WORK.
7. REMOVE BARN OR FEATURE IN ITS ENTIRETY, INCLUDING STRUCTURE, FLOORS, FOUNDATIONS, ETC.
8. REMOVE FLOORS, SLABS AND FOUNDATION ONLY. REMOVAL AND SALVAGE BARN OR ABOVE-GROUND STRUCTURES AND STORE IN THE IMMEDIATE ADJACENT TOBACCO BARD.
9. COORDINATE THE REMOVAL OF EXISTING OVERHEAD ELECTRIC FACILITIES WITH ELECTRICAL SITE PLANS "UE" SERIES SHEETS.
10. EXISTING GRAVEL DRIVE TO REMAIN. CONTRACTOR SHALL UTILIZE EXISTING AS BASE FOR NEW LOUISVILLE LOOP – COORDINATE WITH NEW WORK "LT" SERIES SHEETS.
11. INSTALL TREE PROTECTION FENCING (REINFORCED SILT FENCE PER MSD EF-10-02). COORDINATE WITH TREE PRESERVATION NOTES, SHEET G0.12.
12. INSTALL ORANGE CONSTRUCTION FENCING AROUND ARCHEOLOGICAL / GLADECREST / WETLAND AREAS AS SHOWN ON PLAN PRIOR TO ANY WORK IN PROXIMITY.
13. IN LIEU OF A CONSTRUCTION FENCE, CONTRACTOR SHALL DEMARK LIMITS OF DISTURBANCE WITH PINK SURVEY RIBBON TIED TO FOLIAGE AT INTERVALS OFTEN ENOUGH TO ASCERTAIN LIMITS ALONG THE ALIGNMENT TO LIMITS INDICATED ON PLAN. CONTRACTOR SHALL LIMIT DISTURBANCE AND PRESENCE TO THE FORK-SIDE OF THE ALIGNMENT.
14. REMOVE EXISTING WATER LINE TO LIMITS INDICATED ON PLAN. COORDINATE WITH LAYOUT PLANS AND OR UTILITY SHEETS FOR NEW ALIGNMENT INFORMATION. CONTRACTOR SHALL COORDINATE WITH THE LOUISVILLE WATER COMPANY FOR ALL ASPECTS OF THIS WORK.
15. INSTALL TEMPORARY GRAVEL CONSTRUCTION ENTRANCE AT ACCESS POINTS WHERE SHOWN AND PER MSD STANDARD DRAWING ER-01-02. SEE GENERAL SWPPP NOTES, SHEET G0.13, GRADING PLANS AND MAINTENANCE OF TRAFFIC PLANS FOR ADDITIONAL EROSION CONTROL AND ACCESS INFORMATION.

MATCH LINE – SEE SHEET ST-2.5

MATCH LINE – SEE SHEET ST-2.6

MATCH LINE – SEE SHEET ST-2.7

MATCH LINE – SEE SHEET ST-2.6

FLOYDS FORK

SPEED PARK ROAD

0 100' 200'

Seals

STATE OF KENTUCKY
ROBERT D. MARTIN
15958
LICENSED
PROFESSIONAL ENGINEER
5/8/13

Engineering
Planning

1046 East Chestnut Street, Louisville, Kentucky 40204
Phone: (502) 584-0622 Fax: (502) 584-0629
Kentucky • Indiana • Georgia • Tennessee • Florida

LANDSCAPE ARCHITECT

WRT

Wallace Roberts & Todd, LLC

1700 Market Street
28th Floor
Philadelphia, PA 19103

tel 215.732.5215
fax 215.732.2551

Architect

BRAVURA

111 West Washington Street
Louisville, Kentucky 40202
T: (502) 584-9900
F: (502) 584-0829

The Parklands of Floyds Fork, Project 4A

The Strand, Turkey Run Park and Broad Run
Louisville, Kentucky

Owner:
21st Century Parks, Inc.
371 W. Main St., Suite 202
Louisville, Kentucky 40202

REV #	DATE	DESCRIPTION
2	05.30.2013	Addendum #2: Sheet Reissued Whole

Job No:	12300.4AC
Date:	May 8, 2013
Scale:	1" = 100'
Drawn By:	

BID SET

Drawing Title:

Parklands of Floyds Fork

The Strand PROJECT 4A Demolition and Tree Preservation

Drawing No:

ST-C2.6

May 31, 2013 - 2:08pm
C:\Users\tyler.PHILLY\Dropbox\Work\Work\Louisville\12300.4AC - 100 - DEMOLITION.dwg (ST-C2.6)

KEYNOTES (not all keynotes used this sheet)

1. SAWCUT AND REMOVE EXISTING ASPHALT PAVEMENT TO LIMITS INDICATED ON PLAN. COORDINATE WITH LIMITS OF PROPOSED WORK.
2. REMOVE EXISTING GRAVEL ROAD TO LIMITS INDICATED ON PLAN. COORDINATE WITH LIMITS OF PROPOSED WORK.
3. CLEAR AND GRUB EXISTING VEGETATION TO LIMITS INDICATED ON PLAN. COORDINATE WITH LIMITS OF PROPOSED WORK.
4. REMOVE EXISTING FENCE COMPLETELY. FILL RESULTING HOLES WITH EARTH COMPACTED IN 6" LIFTS UNTIL FLUSH WITH ADJACENT GRADE.
5. EXISTING CONSTRUCTION HAUL ROAD (CONSTRUCTED BY PHASE 3A CONTRACTOR) SHALL BE UTILIZED FOR EXCURSION TRAIL ALIGNMENT.
6. REMOVE EXISTING VEHICULAR GUARD RAIL TO LIMITS SHOW ON PLAN. COORDINATE WITH PROPOSED WORK.
7. REMOVE BARN OR FEATURE IN ITS ENTIRETY, INCLUDING STRUCTURE, FLOORS, FOUNDATIONS, ETC.
8. REMOVE FLOORS, SLABS AND FOUNDATION ONLY. REMOVAL AND SALVAGE BARN OR ABOVE-GROUND STRUCTURES AND STORE IN THE IMMEDIATE ADJACENT TOBACCO BARD.
9. COORDINATE THE REMOVAL OF EXISTING OVERHEAD ELECTRIC FACILITIES WITH ELECTRICAL SITE PLANS "UE" SERIES SHEETS.
10. EXISTING GRAVEL DRIVE TO REMAIN. CONTRACTOR SHALL UTILIZE EXISTING AS BASE FOR NEW LOUISVILLE LOOP - COORDINATE WITH NEW WORK "LT" SERIES SHEETS.
11. INSTALL TREE PROTECTION FENCING (REINFORCED SILT FENCE PER MSD EF-10-02). COORDINATE WITH TREE PRESERVATION NOTES, SHEET G0.12.
12. INSTALL ORANGE CONSTRUCTION FENCING AROUND ARCHEOLOGICAL / GLADECREST / WETLAND AREAS AS SHOWN ON PLAN PRIOR TO ANY WORK IN PROXIMITY.
13. IN LIEU OF A CONSTRUCTION FENCE, CONTRACTOR SHALL DEMARK LIMITS OF DISTURBANCE WITH PINK SURVEY RIBBON TIED TO FOLIAGE AT INTERVALS OFTEN ENOUGH TO ASCERTAIN LIMITS ALONG THE ALIGNMENT TO LIMITS INDICATED ON PLAN. CONTRACTOR SHALL LIMIT DISTURBANCE AND PRESENCE TO THE FORK-SIDE OF THE ALIGNMENT.
14. REMOVE EXISTING WATER LINE TO LIMITS INDICATED ON PLAN. COORDINATE WITH LAYOUT PLANS AND OR UTILITY SHEETS FOR NEW ALIGNMENT INFORMATION. CONTRACTOR SHALL COORDINATE WITH THE LOUISVILLE WATER COMPANY FOR ALL ASPECTS OF THIS WORK.
15. INSTALL TEMPORARY GRAVEL CONSTRUCTION ENTRANCE AT ACCESS POINTS WHERE SHOWN AND PER MSD STANDARD DRAWING ER-01-02. SEE GENERAL SWPPP NOTES, SHEET G0.13, GRADING PLANS AND MAINTENANCE OF TRAFFIC PLANS FOR ADDITIONAL EROSION CONTROL AND ACCESS INFORMATION.

MATCH LINE - SEE SHEET ST-2.4

MATCH LINE - SEE SHEET ST-2.5

MATCH LINE - SEE SHEET ST-2.6

Archaeological Area F-1

FLOYDS FORK

NOTE: BEFORE REMOVING THIS FENCE, CONTRACTOR SHALL PROVIDE A MEANS TO MAINTAIN A SECURE PERIMETER TO KEEP LIVESTOCK ON THE OWNERS PROPERTY. THIS MAY INCLUDE EITHER CONSTRUCTING THE NEW FENCE PRIOR TO REMOVING THE EXISTING FENCE OR PROVIDING A TEMPORARY FENCE OF ADEQUATE HEIGHT AND STRENGTH TO SECURE THE LIVE STOCK. THE CONTRACTOR SHALL COORDINATE AND COMMUNICATE THE METHOD OF PHASING WITH THE OWNER'S ARCHITECT.

NOTE: BEFORE REMOVING THIS FENCE, CONTRACTOR SHALL PROVIDE A MEANS TO MAINTAIN A SECURE PERIMETER TO KEEP LIVESTOCK ON THE OWNERS PROPERTY. THIS MAY INCLUDE EITHER CONSTRUCTING THE NEW FENCE PRIOR TO REMOVING THE EXISTING FENCE OR PROVIDING A TEMPORARY FENCE OF ADEQUATE HEIGHT AND STRENGTH TO SECURE THE LIVE STOCK. THE CONTRACTOR SHALL COORDINATE AND COMMUNICATE THE METHOD OF PHASING WITH THE OWNER'S ARCHITECT.

0 100' 200'

Seals

STATE OF KENTUCKY
ROBERT D. MARTIN
15958
LICENSED
PROFESSIONAL ENGINEER
Robert D. Martin
5/8/13

Engineering
Planning
1046 East Chestnut Street, Louisville, Kentucky 40204
502.584.6300 www.qkpe.com
Kentucky • Indiana • Georgia • Tennessee • Florida

LANDSCAPE ARCHITECT
WRT
Wallace Roberts & Todd, LLC
1700 Market Street
28th Floor
Philadelphia, PA 19103
tel 215.732.5215
fax 215.732.2551

Architect
BRAVURA
111 West Washington Street
Louisville, Kentucky 40202
T: (502) 584-9900
F: (502) 584-0829

The Parklands of Floyds Fork, Project 4A

The Strand, Turkey Run Park and Broad Run
Louisville, Kentucky

Owner:
21st Century Parks, Inc.
371 W. Main St., Suite 202
Louisville, Kentucky 40202

REV #	DATE	DESCRIPTION
2	05-30-2013	Addendum#2: Sheet Reissued Whole
1	05-23-2013	Addendum #1: Archaeological Area Fencing Adjustment

Job No: 12300.4AC
Date: May 8, 2013
Scale: 1" = 100'
Drawn By:

BID SET

Drawing Title:

Parklands of Floyds Fork

The Strand
PROJECT 4A
Demolition and Tree Preservation

Drawing No:

ST-C2.5

May 31, 2013 - 2:08pm
C:\Users\User.PA-WT\Dropbox\Work\Active_Jobs\12300.4AC - 100 - DEMOLITION.dwg (ST-C2.5)

KEYNOTES (not all keynotes used this sheet)

1. SAWCUT AND REMOVE EXISTING ASPHALT PAVEMENT TO LIMITS INDICATED ON PLAN. COORDINATE WITH LIMITS OF PROPOSED WORK.
2. REMOVE EXISTING GRAVEL ROAD TO LIMITS INDICATED ON PLAN. COORDINATE WITH LIMITS OF PROPOSED WORK.
3. CLEAR AND GRUB EXISTING VEGETATION TO LIMITS INDICATED ON PLAN. COORDINATE WITH LIMITS OF PROPOSED WORK.
4. REMOVE EXISTING FENCE COMPLETELY. FILL RESULTING HOLES WITH EARTH COMPACTED IN 6" LIFTS UNTIL FLUSH WITH ADJACENT GRADE.
5. EXISTING CONSTRUCTION HAUL ROAD (CONSTRUCTED BY PHASE 3A CONTRACTOR) SHALL BE UTILIZED FOR EXCURSION TRAIL ALIGNMENT.
6. REMOVE EXISTING VEHICULAR GUARD RAIL TO LIMITS SHOW ON PLAN. COORDINATE WITH PROPOSED WORK.
7. REMOVE BARN OR FEATURE IN ITS ENTIRETY, INCLUDING STRUCTURE, FLOORS, FOUNDATIONS, ETC.
8. REMOVE FLOORS, SLABS AND FOUNDATION ONLY. REMOVAL AND SALVAGE BARN OR ABOVE-GROUND STRUCTURES AND STORE IN THE IMMEDIATE ADJACENT TOBACCO BARD.
9. COORDINATE THE REMOVAL OF EXISTING OVERHEAD ELECTRIC FACILITIES WITH ELECTRICAL SITE PLANS "UE" SERIES SHEETS.
10. EXISTING GRAVEL DRIVE TO REMAIN. CONTRACTOR SHALL UTILIZE EXISTING AS BASE FOR NEW LOUISVILLE LOOP – COORDINATE WITH NEW WORK "LT" SERIES SHEETS.
11. INSTALL TREE PROTECTION FENCING (REINFORCED SILT FENCE PER MSD EF-10-02). COORDINATE WITH TREE PRESERVATION NOTES, SHEET G0.12.
12. INSTALL ORANGE CONSTRUCTION FENCING AROUND ARCHEOLOGICAL / GLADECREST / WETLAND AREAS AS SHOWN ON PLAN PRIOR TO ANY WORK IN PROXIMITY.
13. IN LIEU OF A CONSTRUCTION FENCE, CONTRACTOR SHALL DEMARK LIMITS OF DISTURBANCE WITH PINK SURVEY RIBBON TIED TO FOLIAGE AT INTERVALS OFTEN ENOUGH TO ASCERTAIN LIMITS ALONG THE ALIGNMENT TO LIMITS INDICATED ON PLAN. CONTRACTOR SHALL LIMIT DISTURBANCE AND PRESENCE TO THE FORK-SIDE OF THE ALIGNMENT.
14. REMOVE EXISTING WATER LINE TO LIMITS INDICATED ON PLAN. COORDINATE WITH LAYOUT PLANS AND OR UTILITY SHEETS FOR NEW ALIGNMENT INFORMATION. CONTRACTOR SHALL COORDINATE WITH THE LOUISVILLE WATER COMPANY FOR ALL ASPECTS OF THIS WORK.
15. INSTALL TEMPORARY GRAVEL CONSTRUCTION ENTRANCE AT ACCESS POINTS WHERE SHOWN AND PER MSD STANDARD DRAWING ER-01-02. SEE GENERAL SWPPP NOTES, SHEET G0.13, GRADING PLANS AND MAINTENANCE OF TRAFFIC PLANS FOR ADDITIONAL EROSION CONTROL AND ACCESS INFORMATION.

NOTE: BEFORE REMOVING THIS FENCE, CONTRACTOR SHALL PROVIDE A MEANS TO MAINTAIN A SECURE PERIMETER TO KEEP LIVESTOCK ON THE OWNERS PROPERTY. THIS MAY INCLUDE EITHER CONSTRUCTING THE NEW FENCE PRIOR TO REMOVING THE EXISTING FENCE OR PROVIDING A TEMPORARY FENCE OF ADEQUATE HEIGHT AND STRENGTH TO SECURE THE LIVE STOCK. THE CONTRACTOR SHALL COORDINATE AND COMMUNICATE THE METHOD OF PHASING WITH THE OWNER'S ARCHITECT.

MATCH LINE – SEE SHEET ST-2.5
MATCH LINE – SEE SHEET ST-2.4
MATCH LINE – SEE SHEET ST-2.4
MATCH LINE – SEE SHEET ST-2.3

Seals

STATE OF KENTUCKY · ROBERT D. MARTIN · 15958 · LICENSED PROFESSIONAL ENGINEER
5/8/13

Engineering
Planning
1046 East Chestnut Street, Louisville, Kentucky 40204
502.584.6858 · www.qkpartners.com
Kentucky • Indiana • Georgia • Tennessee • Florida

LANDSCAPE ARCHITECT
WRT
Wallace Roberts & Todd, LLC
1700 Market Street
28th Floor
Philadelphia, PA 19103
tel 215.732.5215
fax 215.732.2551

Architect
BRAVURA
111 West Washington Street
Louisville, Kentucky 40202
T: (502) 584-9900
F: (502) 584-0829

The Parklands of Floyds Fork, Project 4A

The Strand, Turkey Run Park and Broad Run
Louisville, Kentucky

Owner:
21st Century Parks, Inc.
371 W. Main St., Suite 202
Louisville, Kentucky 40202

REV #	DATE	DESCRIPTION
2	05-30-2013	Addendum#2: Sheet Reissued Whole
1	05-23-2013	Addendum #1: Archaeological Area Fencing Adjustment

Job No: 12300.4AC
Date: May 8, 2013
Scale: 1" = 100'
Drawn By:
BID SET

Drawing Title:
Parklands of Floyds Fork
The Strand
PROJECT 4A
Demolition and Tree Preservation

Drawing No:
ST-C2.4

May 31, 2013 - 2:08pm
C:\Users\tyler.PHILLY\Appdata\Local\Temp\AcPublish_596\123004AC-100-DEMOLITION.dwg (ST-C2.4)

KEYNOTES (not all keynotes used this sheet)

1. SAWCUT AND REMOVE EXISTING ASPHALT PAVEMENT TO LIMITS INDICATED ON PLAN. COORDINATE WITH LIMITS OF PROPOSED WORK.
2. REMOVE EXISTING GRAVEL ROAD TO LIMITS INDICATED ON PLAN. COORDINATE WITH LIMITS OF PROPOSED WORK.
3. CLEAR AND GRUB EXISTING VEGETATION TO LIMITS INDICATED ON PLAN. COORDINATE WITH LIMITS OF PROPOSED WORK.
4. REMOVE EXISTING FENCE COMPLETELY. FILL RESULTING HOLES WITH EARTH COMPACTED IN 6" LIFTS UNTIL FLUSH WITH ADJACENT GRADE.
5. EXISTING CONSTRUCTION HAUL ROAD (CONSTRUCTED BY PHASE 3A CONTRACTOR) SHALL BE UTILIZED FOR EXCURSION TRAIL ALIGNMENT.
6. REMOVE EXISTING VEHICULAR GUARD RAIL TO LIMITS SHOW ON PLAN. COORDINATE WITH PROPOSED WORK.
7. REMOVE BARN OR FEATURE IN ITS ENTIRETY, INCLUDING STRUCTURE, FLOORS, FOUNDATIONS, ETC.
8. REMOVE FLOORS, SLABS AND FOUNDATION ONLY. REMOVAL AND SALVAGE BARN OR ABOVE-GROUND STRUCTURES AND STORE IN THE IMMEDIATE ADJACENT TOBACCO BARD.
9. COORDINATE THE REMOVAL OF EXISTING OVERHEAD ELECTRIC FACILITIES WITH ELECTRICAL SITE PLANS "UE" SERIES SHEETS.
10. EXISTING GRAVEL DRIVE TO REMAIN. CONTRACTOR SHALL UTILIZE EXISTING AS BASE FOR NEW LOUISVILLE LOOP - COORDINATE WITH NEW WORK "LT" SERIES SHEETS.
11. INSTALL TREE PROTECTION FENCING (REINFORCED SILT FENCE PER MSD EF-10-02). COORDINATE WITH TREE PRESERVATION NOTES, SHEET G0.12.
12. INSTALL ORANGE CONSTRUCTION FENCING AROUND ARCHEOLOGICAL / GLADECREST / WETLAND AREAS AS SHOWN ON PLAN PRIOR TO ANY WORK IN PROXIMITY.
13. IN LIEU OF A CONSTRUCTION FENCE, CONTRACTOR SHALL DEMARK LIMITS OF DISTURBANCE WITH PINK SURVEY RIBBON TIED TO FOLIAGE AT INTERVALS OFTEN ENOUGH TO ASCERTAIN LIMITS ALONG THE ALIGNMENT TO LIMITS INDICATED ON PLAN. CONTRACTOR SHALL LIMIT DISTURBANCE AND PRESENCE TO THE FORK-SIDE OF THE ALIGNMENT.
14. REMOVE EXISTING WATER LINE TO LIMITS INDICATED ON PLAN. COORDINATE WITH LAYOUT PLANS AND OR UTILITY SHEETS FOR NEW ALIGNMENT INFORMATION. CONTRACTOR SHALL COORDINATE WITH THE LOUISVILLE WATER COMPANY FOR ALL ASPECTS OF THIS WORK.
15. INSTALL TEMPORARY GRAVEL CONSTRUCTION ENTRANCE AT ACCESS POINTS WHERE SHOWN AND PER MSD STANDARD DRAWING ER-01-02. SEE GENERAL SWPPP NOTES, SHEET G0.13, GRADING PLANS AND MAINTENANCE OF TRAFFIC PLANS FOR ADDITIONAL EROSION CONTROL AND ACCESS INFORMATION.

MATCH LINE - SEE SHEET ST-2.3
MATCH LINE - SEE SHEET ST-2.2

MATCH LINE - SEE SHEET ST-2.4
MATCH LINE - SEE SHEET ST-2.3

FLOYDS FORK

0 100' 200'

Seals

STATE OF KENTUCKY
ROBERT D. MARTIN
15958
LICENSED
PROFESSIONAL ENGINEER
5/8/13

Engineering
Planning

1046 East Chestnut Street, Louisville, Kentucky 40204
phone 502.584.6300 fax 502.584.6455
Kentucky • Indiana • Georgia • Tennessee • Florida

LANDSCAPE ARCHITECT

Wallace Roberts & Todd, LLC
1700 Market Street
28th Floor
Philadelphia, PA 19103
tel 215.732.5215
fax 215.732.2551

Architect

BRAVURA
111 West Washington Street
Louisville, Kentucky 40202
T: (502) 584-9900
F: (502) 584-0829

The Parklands of Floyds Fork, Project 4A

The Strand, Turkey Run Park and Broad Run
Louisville, Kentucky

Owner:
21st Century Parks, Inc.
371 W. Main St., Suite 202
Louisville, Kentucky 40202

REV #	DATE	DESCRIPTION
2	05-30-2013	Addendum #2: Sheet Reissued Whole

Job No:	12300.4AC
Date:	May 8, 2013
Scale:	1" = 100'
Drawn By:	

BID SET

Drawing Title:

Parklands of Floyds Fork

The Strand
PROJECT 4A
Demolition and Tree Preservation

Drawing No:

ST-C2.3

May, 31, 2013 - 2:07pm
C:\Users\User PM-1\Vaporstock\Vaca\Vamp\ArcPublish_Set\V12300AC-100-DEMOLITION.dwg (ST-C2.3)

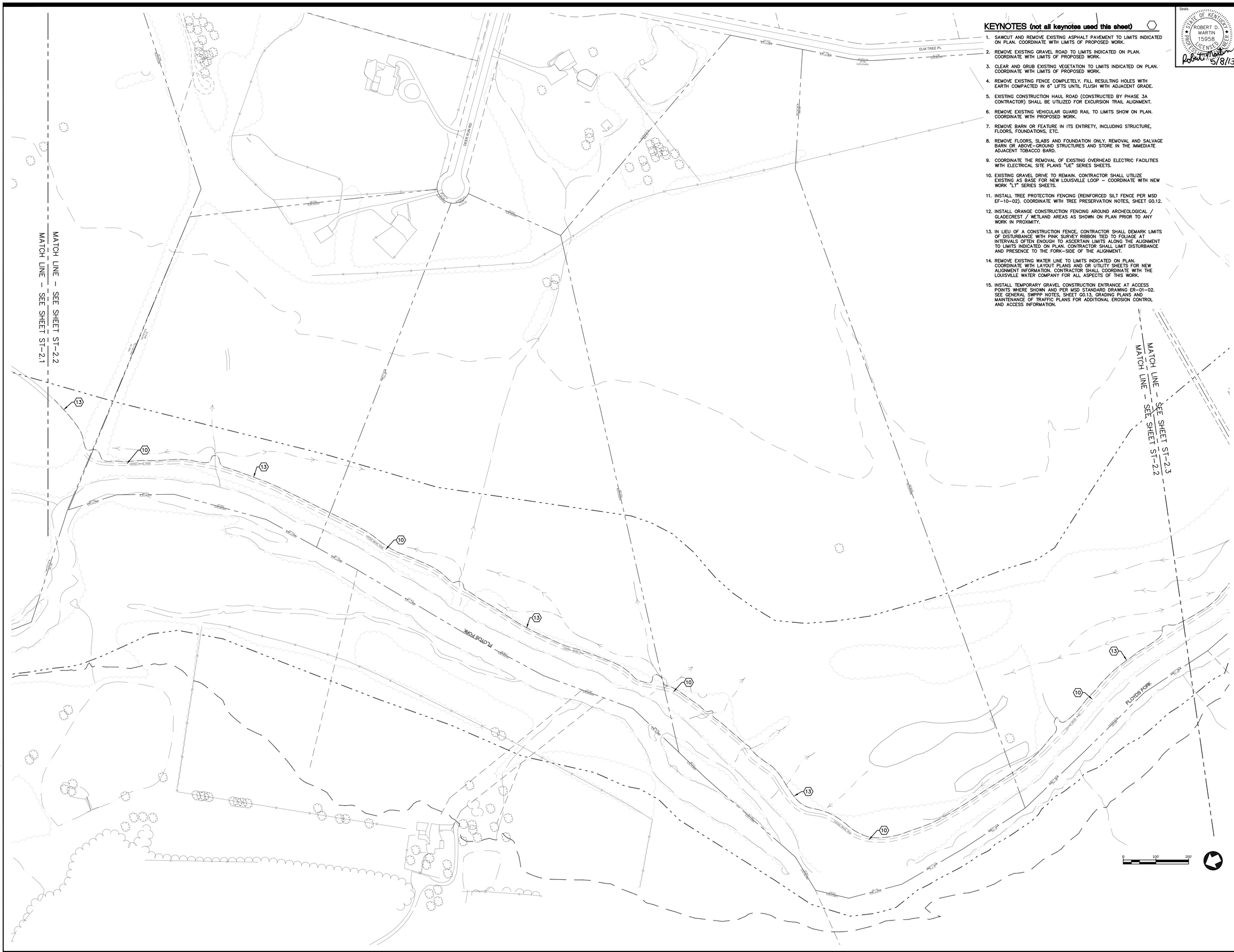

KEYNOTES (not all keynotes used this sheet)

1. SAWCUT AND REMOVE EXISTING ASPHALT PAVEMENT TO LIMITS INDICATED ON PLAN. COORDINATE WITH LIMITS OF PROPOSED WORK.
2. REMOVE EXISTING GRAVEL ROAD TO LIMITS INDICATED ON PLAN. COORDINATE WITH LIMITS OF PROPOSED WORK.
3. CLEAR AND GRUB EXISTING VEGETATION TO LIMITS INDICATED ON PLAN. COORDINATE WITH LIMITS OF PROPOSED WORK.
4. REMOVE EXISTING FENCE COMPLETELY. FILL RESULTING HOLES WITH EARTH COMPACTED IN 6" LIFTS UNTIL FLUSH WITH ADJACENT GRADE.
5. EXISTING CONSTRUCTION HAUL ROAD (CONSTRUCTED BY PHASE 3A CONTRACTOR) SHALL BE UTILIZED FOR EXCURSION TRAIL ALIGNMENT.
6. REMOVE EXISTING VEHICULAR GUARD RAIL TO LIMITS SHOW ON PLAN. COORDINATE WITH PROPOSED WORK.
7. REMOVE BARN OR FEATURE IN ITS ENTIRETY, INCLUDING STRUCTURE, FLOORS, FOUNDATIONS, ETC.
8. REMOVE FLOORS, SLABS AND FOUNDATION ONLY. REMOVAL AND SALVAGE BARN OR ABOVE-GROUND STRUCTURES AND STORE IN THE IMMEDIATE ADJACENT TOBACCO BARD.
9. COORDINATE THE REMOVAL OF EXISTING OVERHEAD ELECTRIC FACILITIES WITH ELECTRICAL SITE PLANS "UE" SERIES SHEETS.
10. EXISTING GRAVEL DRIVE TO REMAIN. CONTRACTOR SHALL UTILIZE EXISTING AS BASE FOR NEW LOUISVILLE LOOP – COORDINATE WITH NEW WORK "LT" SERIES SHEETS.
11. INSTALL TREE PROTECTION FENCING (REINFORCED SILT FENCE PER MSD EF-10-02). COORDINATE WITH TREE PRESERVATION NOTES, SHEET G0.12.
12. INSTALL ORANGE CONSTRUCTION FENCING AROUND ARCHEOLOGICAL / GLADECREST / WETLAND AREAS AS SHOWN ON PLAN PRIOR TO ANY WORK IN PROXIMITY.
13. IN LIEU OF A CONSTRUCTION FENCE, CONTRACTOR SHALL DEMARK LIMITS OF DISTURBANCE WITH PINK SURVEY RIBBON TIED TO FOLIAGE AT INTERVALS OFTEN ENOUGH TO ASCERTAIN LIMITS ALONG THE ALIGNMENT TO LIMITS INDICATED ON PLAN. CONTRACTOR SHALL LIMIT DISTURBANCE AND PRESENCE TO THE FORK-SIDE OF THE ALIGNMENT.
14. REMOVE EXISTING WATER LINE TO LIMITS INDICATED ON PLAN. COORDINATE WITH LAYOUT PLANS AND OR UTILITY SHEETS FOR NEW ALIGNMENT INFORMATION. CONTRACTOR SHALL COORDINATE WITH THE LOUISVILLE WATER COMPANY FOR ALL ASPECTS OF THIS WORK.
15. INSTALL TEMPORARY GRAVEL CONSTRUCTION ENTRANCE AT ACCESS POINTS WHERE SHOWN AND PER MSD STANDARD DRAWING ER-01-02. SEE GENERAL SWPPP NOTES, SHEET G0.13, GRADING PLANS AND MAINTENANCE OF TRAFFIC PLANS FOR ADDITIONAL EROSION CONTROL AND ACCESS INFORMATION.

Seals

STATE OF KENTUCKY
ROBERT D. MARTIN
15958
LICENSED
PROFESSIONAL ENGINEER
Robert D. Martin 5/8/13

Engineering
Planning

1046 East Chestnut Street, Louisville, Kentucky 40204
Phone: 502.584.6262 Fax: 502.584.6269
Kentucky • Indiana • Georgia • Tennessee • Florida

LANDSCAPE ARCHITECT

WRT

Wallace Roberts & Todd, LLC

1700 Market Street
28th Floor
Philadelphia, PA 19103
tel 215.732.5215
fax 215.732.2551

Architect

BRAVURA

111 West Washington Street
Louisville, Kentucky 40202
T: (502) 584-9900
F: (502) 584-0829

The Parklands of Floyds Fork, Project 4A

The Strand, Turkey Run Park and Broad Run
Louisville, Kentucky

Owner:
21st Century Parks, Inc.
371 W. Main St., Suite 202
Louisville, Kentucky 40202

REV #	DATE	DESCRIPTION
2	05.30.2013	Addendum #2: Sheet Reissued Whole

Job No:	12300.4AC
Date:	May 8, 2013
Scale:	1" = 100'
Drawn By:	

BID SET

Drawing Title:

Parklands of Floyds Fork

The Strand
PROJECT 4A
Demolition and Tree Preservation

Drawing No:

ST-C2.2

May 31, 2013 - 2:07pm
C:\Users\Voter.PARKS\Documents\Vocal\Terra\MyPublish_65f6\12300AAC-100-DEMOLITION.dwg (ST-C2.2)

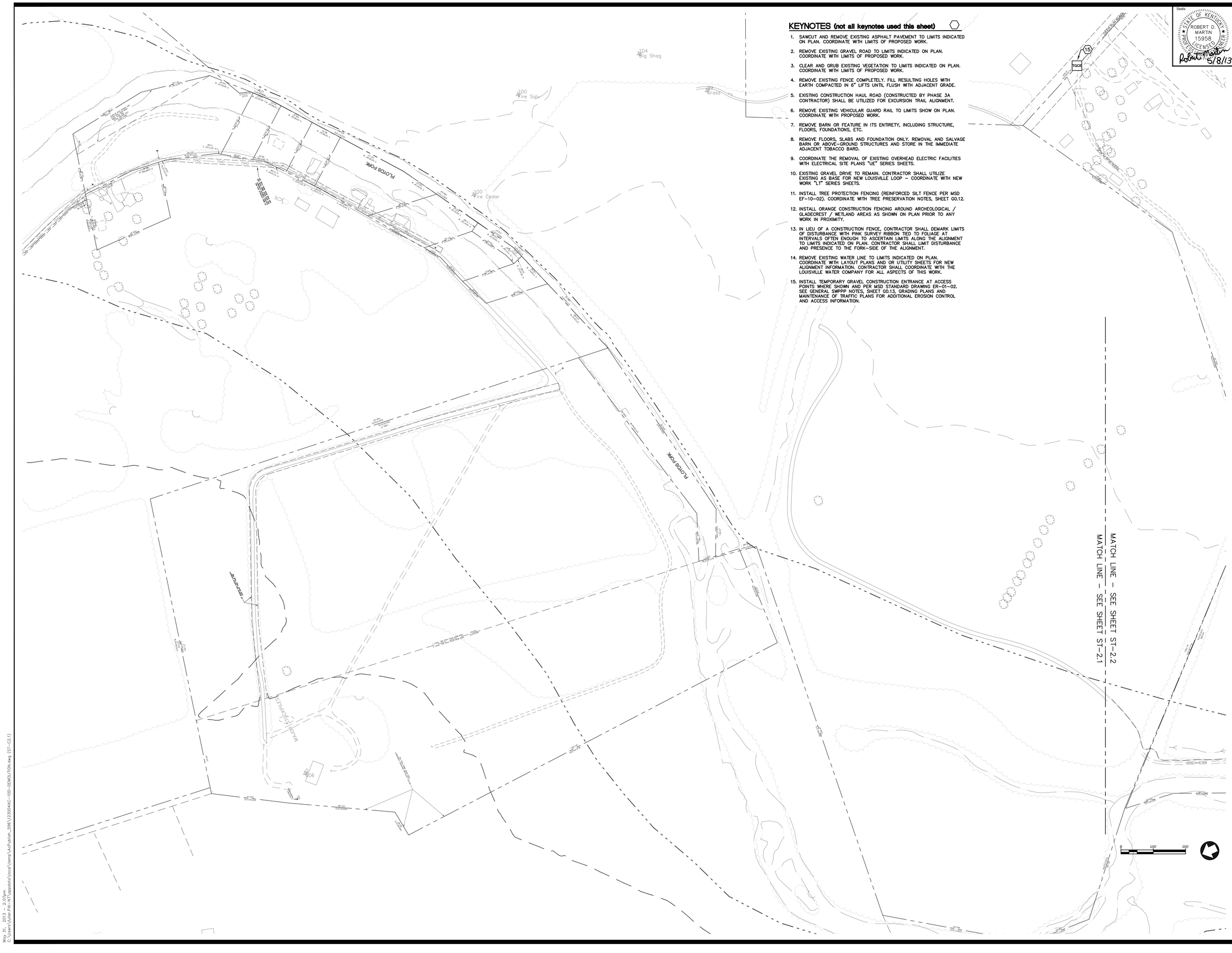

KEYNOTES (not all keynotes used this sheet)

1. SAWCUT AND REMOVE EXISTING ASPHALT PAVEMENT TO LIMITS INDICATED ON PLAN. COORDINATE WITH LIMITS OF PROPOSED WORK.
2. REMOVE EXISTING GRAVEL ROAD TO LIMITS INDICATED ON PLAN. COORDINATE WITH LIMITS OF PROPOSED WORK.
3. CLEAR AND GRUB EXISTING VEGETATION TO LIMITS INDICATED ON PLAN. COORDINATE WITH LIMITS OF PROPOSED WORK.
4. REMOVE EXISTING FENCE COMPLETELY. FILL RESULTING HOLES WITH EARTH COMPACTED IN 6" LIFTS UNTIL FLUSH WITH ADJACENT GRADE.
5. EXISTING CONSTRUCTION HAUL ROAD (CONSTRUCTED BY PHASE 3A CONTRACTOR) SHALL BE UTILIZED FOR EXCURSION TRAIL ALIGNMENT.
6. REMOVE EXISTING VEHICULAR GUARD RAIL TO LIMITS SHOW ON PLAN. COORDINATE WITH PROPOSED WORK.
7. REMOVE BARN OR FEATURE IN ITS ENTIRETY, INCLUDING STRUCTURE, FLOORS, FOUNDATIONS, ETC.
8. REMOVE FLOORS, SLABS AND FOUNDATION ONLY. REMOVAL AND SALVAGE BARN OR ABOVE-GROUND STRUCTURES AND STORE IN THE IMMEDIATE ADJACENT TOBACCO BARD.
9. COORDINATE THE REMOVAL OF EXISTING OVERHEAD ELECTRIC FACILITIES WITH ELECTRICAL SITE PLANS "UE" SERIES SHEETS.
10. EXISTING GRAVEL DRIVE TO REMAIN. CONTRACTOR SHALL UTILIZE EXISTING AS BASE FOR NEW LOUISVILLE LOOP – COORDINATE WITH NEW WORK "LT" SERIES SHEETS.
11. INSTALL TREE PROTECTION FENCING (REINFORCED SILT FENCE PER MSD EF-10-02). COORDINATE WITH TREE PRESERVATION NOTES, SHEET G0.12.
12. INSTALL ORANGE CONSTRUCTION FENCING AROUND ARCHEOLOGICAL / GLADECREST / WETLAND AREAS AS SHOWN ON PLAN PRIOR TO ANY WORK IN PROXIMITY.
13. IN LIEU OF A CONSTRUCTION FENCE, CONTRACTOR SHALL DEMARK LIMITS OF DISTURBANCE WITH PINK SURVEY RIBBON TIED TO FOLIAGE AT INTERVALS OFTEN ENOUGH TO ASCERTAIN LIMITS ALONG THE ALIGNMENT TO LIMITS INDICATED ON PLAN. CONTRACTOR SHALL LIMIT DISTURBANCE AND PRESENCE TO THE FORK-SIDE OF THE ALIGNMENT.
14. REMOVE EXISTING WATER LINE TO LIMITS INDICATED ON PLAN. COORDINATE WITH LAYOUT PLANS AND OR UTILITY SHEETS FOR NEW ALIGNMENT INFORMATION. CONTRACTOR SHALL COORDINATE WITH THE LOUISVILLE WATER COMPANY FOR ALL ASPECTS OF THIS WORK.
15. INSTALL TEMPORARY GRAVEL CONSTRUCTION ENTRANCE AT ACCESS POINTS WHERE SHOWN AND PER MSD STANDARD DRAWING ER-01-02. SEE GENERAL SWPPP NOTES, SHEET G0.13, GRADING PLANS AND MAINTENANCE OF TRAFFIC PLANS FOR ADDITIONAL EROSION CONTROL AND ACCESS INFORMATION.

Seals

STATE OF KENTUCKY
ROBERT D. MARTIN
15958
LICENSED
PROFESSIONAL ENGINEER
Robert D. Martin 5/8/13

Engineering
Planning
1046 East Chestnut Street, Louisville, Kentucky 40204
Phone: 502-585-2222 Internet: www.qk4.com
Kentucky • Indiana • Georgia • Tennessee • Florida

LANDSCAPE ARCHITECT
WRT
Wallace Roberts & Todd, LLC
1700 Market Street
28th Floor
Philadelphia, PA 19103
tel 215.732.5215
fax 215.732.2551

Architect
BRAVURA
111 West Washington Street
Louisville, Kentucky 40202
T: (502) 584-9900
F: (502) 584-0829

The Parklands of Floyds Fork, Project 4A

The Strand, Turkey Run Park and Broad Run
Louisville, Kentucky

Owner:
21st Century Parks, Inc.
371 W. Main St., Suite 202
Louisville, Kentucky 40202

REV #	DATE	DESCRIPTION
2	05-30-2013	Addendum #2: Sheet Reissued Whole

Job No:	12300.4AC
Date:	May 8, 2013
Scale:	1" = 100'
Drawn By:	

BID SET

Drawing Title:

Parklands of Floyds Fork

The Strand PROJECT 4A Demolition and Tree Preservation

Drawing No:

ST-C2.1

May 31, 2013 – 2:07pm
C:\Users\fuller.PAI-NT\appdata\local\temp\AcPublish_596\123004AC-100-DEMOLITION.dwg (ST-C2.1)

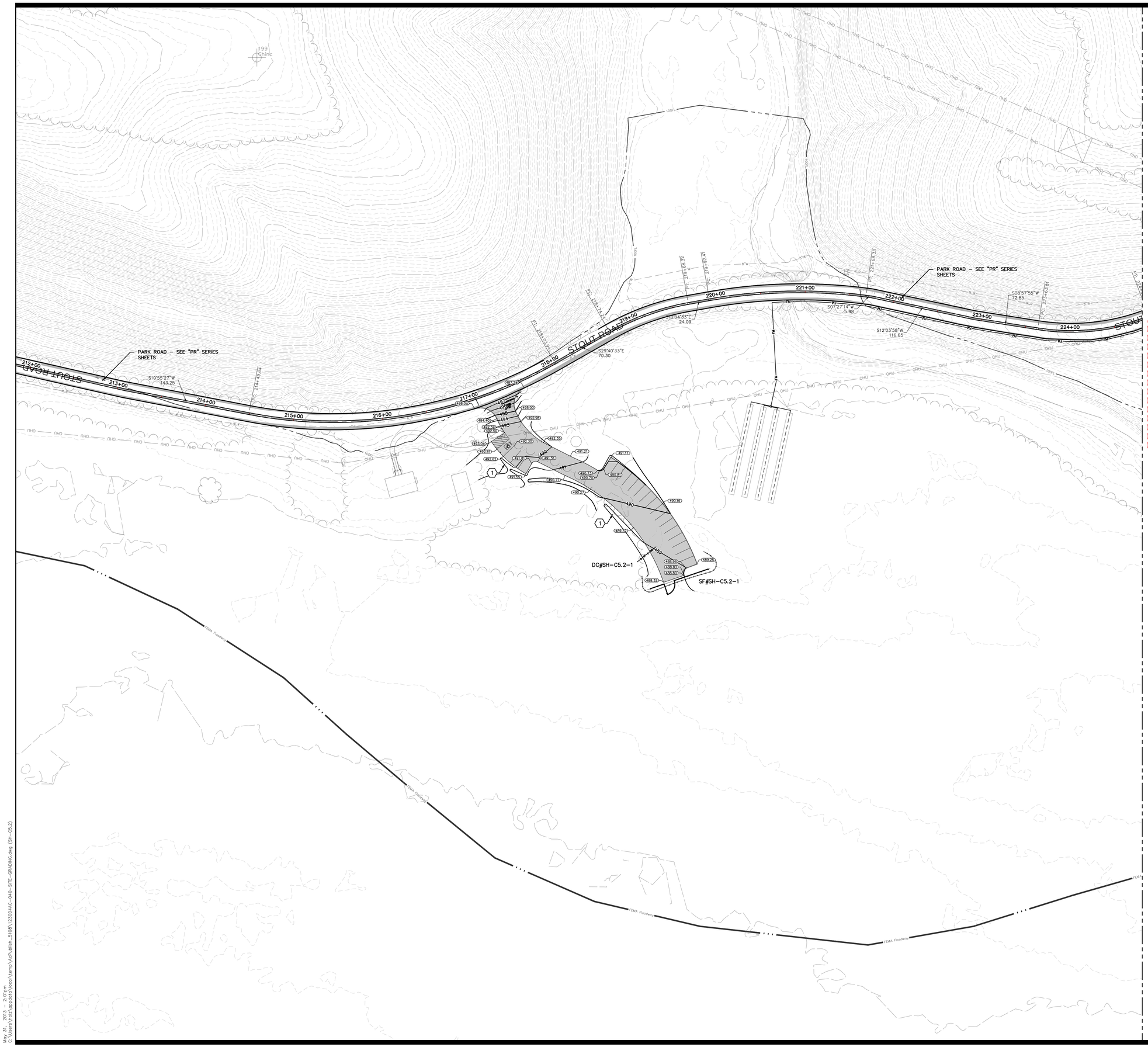

KEYNOTES (not all keynotes used this sheet)

1. CONSTRUCT CONTOURED–BOTTOM SOD SWALE WHERE INDICATED ON PLAN AND PER DETAIL 1, SHEET C9.2.
2. CONTRACTOR SHALL INSTALL COFFERDAM AS NECESSARY TO FACILITATE CANOE LAUNCH CONSTRUCTION. COORDINATE WITH GENERAL SWPPP NOTES, SHEET G0.12. CONTRACTOR SHALL WORK WITH THE MSD INSPECTOR AND DEVISE A COFFER DAM SYSTEM AND IMPLEMENTATION PLAN AND SUBMIT TO OWNER'S ENGINEER FOR REVIEW IN THE FORM OF A SHOP DRAWING SUBMITTAL PRIOR TO ANY CONSTRUCTION.
3. INSTALL SILO CENTER BASIN WHERE INDICATED ON PLAN AND PER DETAIL 14, SHEET C9.1. COORDINATE WITH PIPE AND STRUCTURE SUMMARY SHEETS.
4. MOWN LAWN TRAIL – GRADE THE SILO CENTER MOUND TO CREATE A BENCH TO ACCOMMODATE THE MOWN LAWN TRAIL AS INDICATED ON PLAN. SEED AREA WITH MOWN LAWN MIX. SEED ALL REMAINING AREAS OF THE SILO CENTER MOUND WITH WILDFLOWER MEADOW MIX – DRY.
5. PORCH LAWN – GRADE AREA AS INDICATED ON PLAN. SEED WITH MOWN LAWN MIX.
6. INSTALL 20'(long) x 4'(wide) SCOUR STOP AT END OF FLUME / CURB DEPRESSION WHERE INDICATED ON PLAN AND PER DETAIL 2, SHEET C9.2.

GENERAL NOTES

A. SEE C3 SERIES SHEETS FOR ALL PIPE AND STRUCTURE INFORMATION.

B. COORDINATE WITH GENERAL SWPPP NOTES FOR LINEAR CONSTRUCTION ON SHEET G0.12 FOR EROSION CONTROL MEASURES PERTAINING TO PARK ROAD, LOUISVILLE LOOP AND EXCURSION TRAIL CONSTRUCTION.

C. SEE PR–SERIES PLANS FOR ALL ROADSIDE DITCH INFORMATION.

D. SEE LT–SERIES PLANS FOR ALL TRAILSIDE DITCH INFORMATION.

E. SEE G0.12 FOR SEEDING MIXTURES AND AREAS OF APPLICATION.

SWPPP PHASING

A. PERFORM SITE CLEARING OPERATIONS AS REQUIRED TO FACILITATE CONSTRUCTION.

B. INSTALL SILT FENCE SF#SH–C5.2–1.

C. BRING PARKING AREA TO ROUGH GRADE.

D. INSTALL ROCK DITCH CHECK DC#SH–C5.2–1.

E. ROCK PARKING AREA.

F. FINAL GRADE AND STABILIZE DISTURBED AREAS WITH APPROPRIATE SEED MIX.

G. INSTALL ASPHALT PAVEMENT.

H. CLEAN EVERY TWO WEEKS AND AFTER EACH RAINFALL EVENT OF 0.5" OR GREATER.

I. REMOVE ALL BMPs AFTER SITE IS STABILIZED.

BMP LEGEND

- SBIP — STONE BAG INLET PROTECTION EF–03/05/06–02
- TGCE — TEMPORARY GRAVEL CONST. ENTRANCE/EXIT ER–01–02
- OS — SCOUR STOP PAD OUTLET STABILIZATION
- PE — PIPE INLET PROTECTION PER DETAIL 1, SHEET G0.13.
- SF#X — REINFORCED SILT FENCE EF–10–02
- DC#X — ROCK DITCH CHECK EB–03–01
- TEMPORARY COFFER DAM
- PUMP AROUND FLOW DIVERSION ED–01–01

0 40' 80'

Seals

STATE OF KENTUCKY — ROBERT D. MARTIN — 15958 — LICENSED PROFESSIONAL ENGINEER
Robert D. Martin 5/8/13

Engineering
Planning
1046 East Chestnut Street, Louisville, Kentucky 40204
502.584.7200 www.qkpartners.com
Kentucky • Indiana • Georgia • Tennessee • Florida

LANDSCAPE ARCHITECT
WRT
Wallace Roberts & Todd, LLC
1700 Market Street
28th Floor
Philadelphia, PA 19103
tel 215.732.5215
fax 215.732.2551

Architect
BRAVURA
111 West Washington Street
Louisville, Kentucky 40202
T: (502) 584-9900
F: (502) 584-0829

The Parklands of Floyds Fork, Project 4A
The Strand, Turkey Run Park and Broad Run
Louisville, Kentucky

Owner:
21st Century Parks, Inc.
371 W. Main St., Suite 202
Louisville, Kentucky 40202

REV #	DATE	DESCRIPTION
2	05-30-2013	Addendum2, MSD comments

Job No: 12300.4AC
Date: May 8, 2013
Scale: 1" = 40'
Drawn By:

BID SET

Drawing Title:
Parklands of Floyds Fork
Sugar Hill
PROJECT 4A
Parking Lot Grading, Drainage and SWPPP

Drawing No:
SH-C5.2

May 31, 2013 – 2:01pm
C:\Users\tvoit.stapleton\Local\Temp\1\AcPublish_5108\12300.4AC–040–SITE–GRADING.dwg (SH–C5.2)

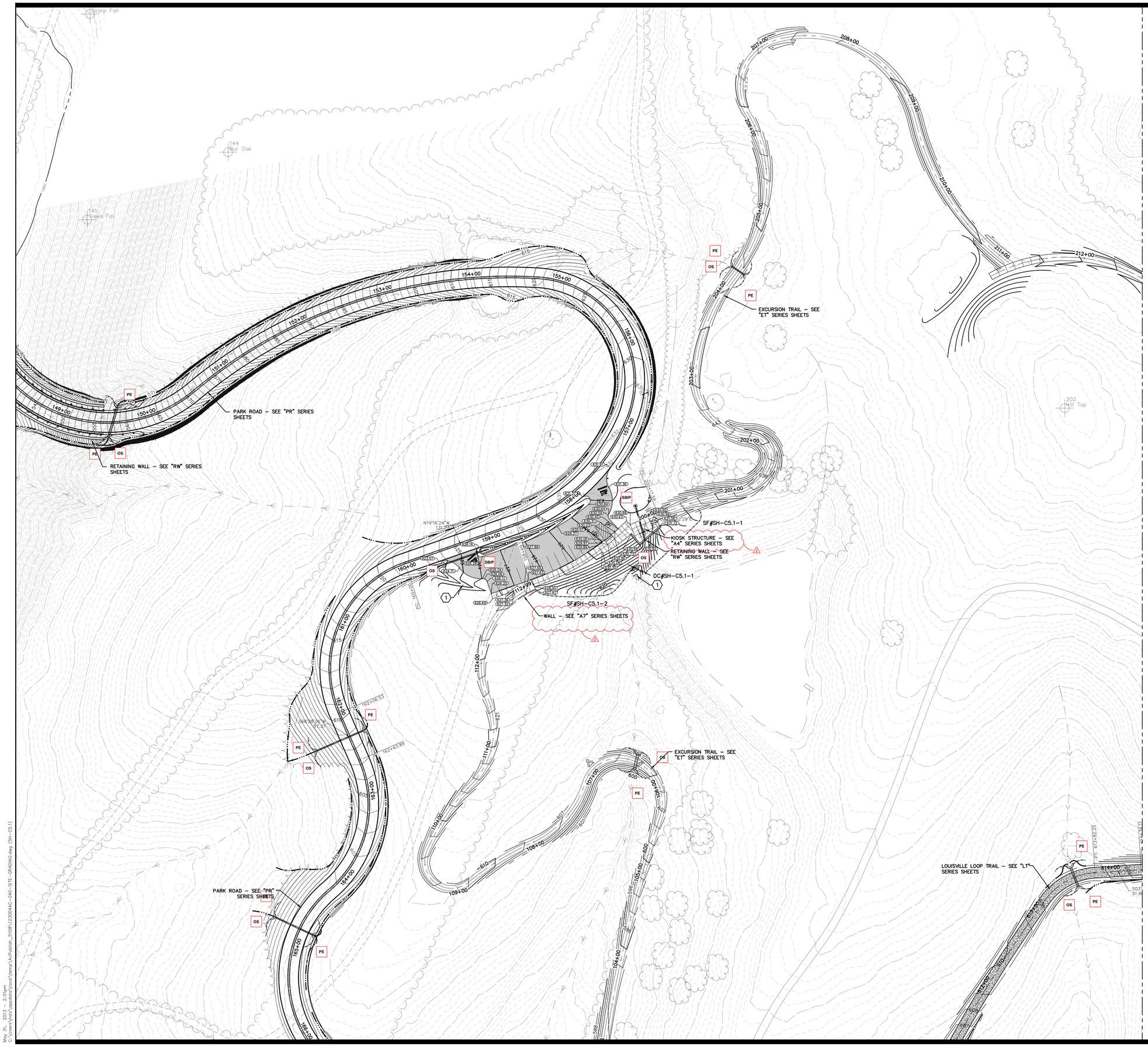

Seals

STATE OF KENTUCKY
ROBERT D. MARTIN
15958
LICENSED
PROFESSIONAL ENGINEER
Robert D. Martin
5/8/13

KEYNOTES (not all keynotes used this sheet)

1. CONSTRUCT CONTOURED–BOTTOM SOD SWALE WHERE INDICATED ON PLAN AND PER DETAIL 1, SHEET C9.2.
2. CONTRACTOR SHALL INSTALL COFFERDAM AS NECESSARY TO FACILITATE CANOE LAUNCH CONSTRUCTION. COORDINATE WITH GENERAL SWPPP NOTES, SHEET G0.12. CONTRACTOR SHALL WORK WITH THE MSD INSPECTOR AND DEVISE A COFFER DAM SYSTEM AND IMPLEMENTATION PLAN AND SUBMIT TO OWNER'S ENGINEER FOR REVIEW IN THE FORM OF A SHOP DRAWING SUBMITTAL PRIOR TO ANY CONSTRUCTION.
3. INSTALL SILO CENTER BASIN WHERE INDICATED ON PLAN AND PER DETAIL 14, SHEET C9.1. COORDINATE WITH PIPE AND STRUCTURE SUMMARY SHEETS.
4. MOWN LAWN TRAIL – GRADE THE SILO CENTER MOUND TO CREATE A BENCH TO ACCOMMODATE THE MOWN LAWN TRAIL AS INDICATED ON PLAN. SEED AREA WITH MOWN LAWN MIX. SEED ALL REMAINING AREAS OF THE SILO CENTER MOUND WITH WILDFLOWER MEADOW MIX – DRY.
5. PORCH LAWN – GRADE AREA AS INDICATED ON PLAN. SEED WITH MOWN LAWN MIX.
6. INSTALL 20'(long) x 4'(wide) SCOUR STOP AT END OF FLUME / CURB DEPRESSION WHERE INDICATED ON PLAN AND PER DETAIL 2, SHEET C9.2.

GENERAL NOTES

A. SEE C3 SERIES SHEETS FOR ALL PIPE AND STRUCTURE INFORMATION.

B. COORDINATE WITH GENERAL SWPPP NOTES FOR LINEAR CONSTRUCTION ON SHEET G0.12 FOR EROSION CONTROL MEASURES PERTAINING TO PARK ROAD, LOUISVILLE LOOP AND EXCURSION TRAIL CONSTRUCTION.

C. SEE PR–SERIES PLANS FOR ALL ROADSIDE DITCH INFORMATION.

D. SEE LT–SERIES PLANS FOR ALL TRAILSIDE DITCH INFORMATION.

E. SEE G0.12 FOR SEEDING MIXTURES AND AREAS OF APPLICATION.

SWPPP PHASING

A. PERFORM SITE CLEARING OPERATIONS AS REQUIRED TO FACILITATE CONSTRUCTION.

B. INSTALL SILT FENCE SF#SH–C5.1–1 AND SH#SH–C5.1–2.

C. INSTALL ROCK DITCH CHECK, DC#SHC5.1–1.

D. BRING TRAIL HEAD AREA UP TO ROUGH GRADE.

E. INSTALL STORM CULVERT PIPES.

F. INSTALL SILT BAG INLET PROTECTION.

G. ROCK PARKING AREA.

H. INSTALL RETAINING WALL,

I. FINAL GRADE AND STABILIZE DISTURBED AREAS WITH APPROPRIATE SEED MIX.

J. INSTALL CONCRETE SIDEWALK AND CONCRETE CURBS.

K. CONSTRUCT TRAILHEAD/KIOSK STRUCTURE.

L. INSTALL ASPHALT PAVEMENT.

M. CLEAN EVERY TWO WEEKS AND AFTER EACH RAINFALL EVENT OF 0.5" OR GREATER.

N. REMOVE ALL BMPs AFTER SITE IS STABILIZED.

O. NOT ALL BMP"s DEPICTED ON THIS SHEET ARE INCLUDED IN THE SWPPP PHASING NOTES ABOVE. COORDINATE WITH "PR" SERIES SHEETS AND "LT" SERIES SHEETS FOR ADDITIONAL BMP's AND SWPPP PHASING NOTES

2

BMP LEGEND

- SBIP — STONE BAG INLET PROTECTION EF–03/05/06–02
- TGCE — TEMPORARY GRAVEL CONST. ENTRANCE/EXIT ER–01–02
- OS — SCOUR STOP PAD OUTLET STABILIZATION
- PE — PIPE INLET PROTECTION PER DETAIL 1, SHEET G0.13.
- SF#X — REINFORCED SILT FENCE EF–10–02
- DC#X — ROCK DITCH CHECK EB–03–01
- TEMPORARY COFFER DAM
- PUMP AROUND FLOW DIVERSION ED–01–01

0 40' 80'

Engineering
Planning
1046 East Chestnut Street, Louisville, Kentucky 40204
Phone: 502.584.6760 Internet: www.qkpsc.com
Kentucky • Indiana • Georgia • Tennessee • Florida

LANDSCAPE ARCHITECT
WRT
Wallace Roberts & Todd, LLC
1700 Market Street
28th Floor
Philadelphia, PA 19103
tel 215.732.5215
fax 215.732.2551

Architect
BRAVURA
111 West Washington Street
Louisville, Kentucky 40202
T: (502) 584-9900
F: (502) 584-0829

The Parklands of Floyds Fork, Project 4A

The Strand, Turkey Run Park and Broad Run
Louisville, Kentucky

Owner:
21st Century Parks, Inc.
371 W. Main St., Suite 202
Louisville, Kentucky 40202

REV.#	DATE	DESCRIPTION
2	05-30-2013	Addendum#2. Rev. wall and structure ref. and MSD comments

Job No: 12300.4AC
Date: May 8, 2013
Scale: 1" = 40'
Drawn By:
BID SET

Drawing Title:
Parklands of Floyds Fork
Sugar Hill PROJECT 4A Trail Head Grading, Drainage and SWPPP

Drawing No:
SH-C5.1

May 31, 2013 – 2:01pm
C:\Users\Vocal\Documents\Vocal Terra\ArcPublish_51981\12300.4AC–040–SITE_GRADING.dwg (SH–C5.1)



KEYNOTES (not all keynotes used this sheet)

1. CONSTRUCT ASPHALT PAVEMENT TO LIMITS INDICATED ON PLAN AND PER DETAIL 1, SHEET C9.1.
2. CONSTRUCT CONCRETE HEADER CURB TO LIMITS INDICATED ON PLAN AND PER DETAIL 4, SHEET C9.1.
3. CONSTRUCT CONCRETE CURB TAPER WHERE INDICATED ON PLAN AND PER DETAIL 5, SHEET C9.1.
4. "VAN ACCESSIBLE" PARKING STALL STRIPING – COORDINATE WITH "RS" SERIES SHEETS.
5. STANDARD ACCESSIBLE PARKING STALL STRIPING – COORDINATE WITH "RS" SERIES SHEETS.
6. PARKING STALL STRIPING – COORDINATE WITH "RS" SERIES SHEETS.
7. HANDICAP PARKING SIGN – COORDINATE WITH "RS" SERIES SHEETS.
8. STOP SIGN – COORDINATE WITH "RS" SERIES SHEETS.
9. "STOP" AND STOP BAR – COORDINATE WITH "RS" SERIES SHEETS.
10. CONSTRUCT CONCRETE SIDEWALK TO LIMITS INDICATED ON PLAN AND PER DETAIL 6, SHEET C9.1.
11. INSTALL LIMESTONE BENCH SEATING WHERE INDICATED ON PLAN AND PER DETAIL 7, SHEET C9.1.
12. INSTALL TEMPORARY CONSTRUCTION FENCE WHERE INDICATED ON PLAN. INSTALL FENCE PRIOR TO ANY NEW CONSTRUCTION OR LAND DISTURBING ACTIVITY.
13. CONSTRUCT CONCRETE FLUME WHERE INDICATED ON PLAN AND PER DETAIL 8, SHEET C9.1.
14. CONSTRUCT CONCRETE CURB BREAK WHERE INDICATED ON PLAN AND PER DETAIL 12, SHEET C9.1.
15. INSTALL FORD CROSSING WHERE INDICATED ON PLAN AND PER DETAIL 13, SHEET C9.1.
16. INSTALL 12' WIDE GRASSY PAVER ACCESS DRIVE (MAINTENANCE AND SERVICE VEHICLES) WHERE INDICATED ON PLAN AND PER DETAIL 5, SHEET 9.2.

Seals

STATE OF KENTUCKY
ROBERT D. MARTIN
15958
LICENSED
PROFESSIONAL ENGINEER
5/8/13

Engineering
Planning
1046 East Chestnut Street, Louisville, Kentucky 40204
Phone: 502.584.6858 Fax: 502.584.4818
Kentucky • Indiana • Georgia • Tennessee • Florida

LANDSCAPE ARCHITECT
WRT
Wallace Roberts & Todd, LLC
1700 Market Street
28th Floor
Philadelphia, PA 19103
tel 215.732.5215
fax 215.732.2551

Architect
BRAVURA
111 West Washington Street
Louisville, Kentucky 40202
T: (502) 584-9900
F: (502) 584-0829

The Parklands of Floyds Fork, Project 4A
The Strand, Turkey Run Park and Broad Run
Louisville, Kentucky

Owner:
21st Century Parks, Inc.
371 W. Main St., Suite 202
Louisville, Kentucky 40202

REV #	DATE	DESCRIPTION
2	05-30-2013	Addendum #2: Clarified limits of concrete curb

Job No: 12300.4AC
Date: May 8, 2013
Scale: 1" = 40'
Drawn By:

BID SET

Drawing Title:
Parklands of Floyds Fork
Sugar Hill PROJECT 4A Parking Lot Layout

Drawing No:
SH-C4.2

May 30, 2013 - 9:55am
N:\12300.4AC - 21st Century Parks Phase 4A\SITE\Dwgs\Civil\12300.4AC-SHD-SITE-LAYOUT.dwg (SH-C4.2)

Scarp Fall

Valley

144
Bur Oak

141
Trees Fall

Valley

N86°20'01"E
560.37'

207+00
208+00
209+00
210+00
211+00
212+00
208+00
205+00
204+00
203+00
202+00
201+00
200+00

EXCURSION TRAIL – SEE "ET" SERIES SHEETS

202
Hill Top

154+00
155+00
153+00
152+00
151+00
156+00
149+00
150+00
157+00
158+00
159+00
160+00
161+00
162+00
163+00
164+00
165+00
166+00

PARK ROAD – SEE "PR" SERIES SHEETS

RETAINING WALL – SEE "RW" SERIES SHEETS

SUGAR HILL – TRAIL HEAD ENLARGED GEOMETRIC PLAN

EP 1
SH-V7.1

N19°16'24"W
131.73'

S23°02'29"E
11.59

TRAILHEAD STRUCTURE – SEE "A4" SERIES SHEETS

RETAINING WALL – SEE "RW" SERIES SHEETS

(TYP)

PC 160+00.00

112+99

112+00

S66°28'26"W
57.37

PT 162+06.51

PC 162+63.89

S79°58'33"E
238.79'

111+00
110+00
109+00
108+00
107+00
106+00
105+00
104+00

EXCURSION TRAIL – SEE "ET" SERIES SHEETS

S69°45'21"E
357.17'

LOUISVILLE LOOP TRAIL – SEE "LT" SERIES SHEETS

PT 613+82.25

614+00
615+00
616+00

S03°
51.84'

0 40' 80'

KEYNOTES (not all keynotes used this sheet)

1. CONSTRUCT ASPHALT PAVEMENT TO LIMITS INDICATED ON PLAN AND PER DETAIL 1, SHEET C9.1.
2. CONSTRUCT CONCRETE HEADER CURB TO LIMITS INDICATED ON PLAN AND PER DETAIL 4, SHEET C9.1.
3. CONSTRUCT CONCRETE CURB TAPER WHERE INDICATED ON PLAN AND PER DETAIL 5, SHEET C9.1.
4. "VAN ACCESSIBLE" PARKING STALL STRIPING – COORDINATE WITH "RS" SERIES SHEETS.
5. STANDARD ACCESSIBLE PARKING STALL STRIPING – COORDINATE WITH "RS" SERIES SHEETS.
6. PARKING STALL STRIPING – COORDINATE WITH "RS" SERIES SHEETS.
7. HANDICAP PARKING SIGN – COORDINATE WITH "RS" SERIES SHEETS.
8. STOP SIGN – COORDINATE WITH "RS" SERIES SHEETS.
9. "STOP" AND STOP BAR – COORDINATE WITH "RS" SERIES SHEETS.
10. CONSTRUCT CONCRETE SIDEWALK TO LIMITS INDICATED ON PLAN AND PER DETAIL 6, SHEET C9.1.
11. INSTALL LIMESTONE BENCH SEATING WHERE INDICATED ON PLAN AND PER DETAIL 7, SHEET C9.1.
12. INSTALL TEMPORARY CONSTRUCTION FENCE WHERE INDICATED ON PLAN. INSTALL FENCE PRIOR TO ANY NEW CONSTRUCTION OR LAND DISTURBING ACTIVITY.
13. CONSTRUCT CONCRETE FLUME WHERE INDICATED ON PLAN AND PER DETAIL 8, SHEET C9.1.
14. CONSTRUCT CONCRETE CURB BREAK WHERE INDICATED ON PLAN AND PER DETAIL 12, SHEET C9.1.
15. INSTALL FORD CROSSING WHERE INDICATED ON PLAN AND PER DETAIL 13, SHEET C9.1.
16. INSTALL 12' WIDE GRASSY PAVER ACCESS DRIVE (MAINTENANCE AND SERVICE VEHICLES) WHERE INDICATED ON PLAN AND PER DETAIL 5, SHEET 9.2.

Seals

STATE OF KENTUCKY
ROBERT D. MARTIN
15958
LICENSED
PROFESSIONAL ENGINEER
Robert D. Martin
5/8/13

Engineering
Planning
1046 East Chestnut Street Louisville, Kentucky 40204
Phone: (502) 584-7999 Internet: www.q4.com
Kentucky • Indiana • Georgia • Tennessee • Florida

LANDSCAPE ARCHITECT
WRT
Wallace Roberts & Todd, LLC
1700 Market Street
28th Floor
Philadelphia, PA 19103
tel 215.732.5215
fax 215.732.2551

Architect
BRAVURA
111 West Washington Street
Louisville, Kentucky 40202
T: (502) 584-9900
F: (502) 584-0829

The Parklands of Floyds Fork, Project 4A
The Strand, Turkey Run Park and Broad Run
Louisville, Kentucky

Owner:
21st Century Parks, Inc.
371 W. Main St., Suite 202
Louisville, Kentucky 40202

REV #	DATE	DESCRIPTION
2	05-30-2013	Addendum #2: Clarified limits of concrete curb

Job No:	12300.4AC
Date:	May 8, 2013
Scale:	1" = 40'
Drawn By:	

BID SET

Drawing Title:
Parklands of Floyds Fork
Sugar Hill PROJECT 4A Trail Head Layout

Drawing No:
SH-C4.1

May 30, 2013 - 9:54am
O:\12300.4AC - 21st Century Parks Phase 4A\SITE\Dwgs\COrd\12300I4AC-040-SITE-LAYOUT.dwg (SH-C4.1)

STRUCTURE SCHEDULE				
NAME	TYPE	RIM/TW EL.	I.E. IN	I.E. OUT
SH-7A	Dry Laid Stone HW	583.94'		(SH-7) 582.00
SH-7B	Dry Laid Stone HW	581.44'	(SH-7) 579.50	
SH-8A	Dry Laid Stone HW	585.94'		(SH-8) 584.00
SH-8B	Dry Laid Stone HW	583.94'	(SH-8) 582.00	
SH-9A	Dry Laid Stone HW	607.00'		(SH-9) 604.25
SH-9B	Dry Laid Stone HW	606.75'	(SH-9) 604.00	
SH-10A	Dry Laid Stone HW	611.21'		(SH-10) 609.00
SH-10B	Dry Laid Stone HW	610.96'	(SH-10) 608.75	
SH-11A	Dry Laid Stone HW	585.54'		(SH-11) 582.25
SH-11B	Dry Laid Stone HW	585.29'	(SH-11) 582.00	
SH-12A	Dry Laid Stone HW	566.29'		(SH-12) 563.00
SH-12B	Dry Laid Stone HW	563.29'	(SH-12) 560.00	

PIPE SCHEDULE			
NAME	SIZE & TYPE	LENGTH	SLOPE
SH-7	15 inch Concrete Pipe	25.64'	9.75%
SH-8	15 inch Concrete Pipe	25.00'	8.00%
SH-9	24 inch Concrete Pipe	25.00'	1.00%
SH-10	18 inch Concrete Pipe	25.00'	1.00%
SH-11	30 inch Concrete Pipe	22.03'	1.13%
SH-12	30 inch Concrete Pipe	37.57'	7.99%

STRUCTURE SCHEDULE				
NAME	TYPE	RIM/TW EL.	I.E. IN	I.E. OUT
ET-1A	Dry Laid Stone HW	603.29'		(ET-1) 600.00
ET-1B	Dry Laid Stone HW	603.04'	(ET-1) 599.75	
ET-2A	Dry Laid Stone HW	643.44'		(ET-2) 641.50
ET-2B	Dry Laid Stone HW	643.24'	(ET-2) 641.30	
ET-3A	Dry Laid Stone HW	615.95'		(ET-3) 613.20
ET-3B	Dry Laid Stone HW	615.75'	(ET-3) 613.00	
ET-4A	Dry Laid Stone HW	614.41'		(ET-4) 612.20
ET-4B	Dry Laid Stone HW	614.21'	(ET-4) 612.00	
ET-5A	Dry Laid Stone HW	618.31'		(ET-5) 616.10
ET-5B	Dry Laid Stone HW	618.11'	(ET-5) 615.90	

PIPE SCHEDULE			
NAME	SIZE & TYPE	LENGTH	SLOPE
ET-1	30 inch Concrete Pipe	19.42'	1.29%
ET-2	15 inch Concrete Pipe	19.00'	1.05%
ET-3	24 inch Concrete Pipe	19.18'	1.04%
ET-4	18 inch Concrete Pipe	19.00'	1.05%
ET-5	18 inch Concrete Pipe	19.00'	1.05%

STRUCTURE SCHEDULE				
NAME	TYPE	RIM/TW EL.	I.E. IN	I.E. OUT
SH-0A	Dry Laid Stone HW	556.75'		(SH-0) 554.00
SH-0B	Dry Laid Stone HW	555.75'	(SH-0) 553.00	
SH-1A	48" Dia. Beehive Inlet	629.00'		(SH-1) 625.50
SH-1B	R-Wall Penetration	624.52'	(SH-1) 623.00	
SH-2A	Dry Laid Stone HW	625.94'		(SH-2) 624.00
SH-2B	Dry Laid Stone HW	624.14'	(SH-2) 622.20	
SH-3A	Sloped & Flared HW	607.94'		(SH-3) 606.00
SH-3B	Sloped & Flared HW	603.94'	(SH-3) 599.00	
SH-4A	Sloped & Flared HW	599.94'		(SH-4) 598.00
SH-4B	Sloped & Flared HW	597.94'	(SH-4) 593.00	
SH-5A	Dry Laid Stone HW	570.33'		(SH-5) 566.50
SH-5B	Dry Laid Stone HW	564.33'	(SH-5) 560.50	
SH-6A	Dry Laid Stone HW	564.94'		(SH-6) 563.00
SH-6B	Dry Laid Stone HW	562.44'	(SH-6) 560.50	
SV-0A	Dry Laid Stone HW	510.00'		(SV-0) 506.00
SV-0B	Dry Laid Stone HW	508.00'	(SV-0) 505.00	
SV-1A	Dry Laid Stone HW	510.92'		(SV-1) 508.50
SV-1B	Dry Laid Stone HW	510.42'	(SV-1) 508.00	
SV-2A	Dry Laid Stone HW	507.15'		(SV-2) 501.50
SV-2B	Dry Laid Stone HW	506.55'	(SV-2) 500.90	

STRUCTURE SCHEDULE				
NAME	TYPE	RIM/TW EL.	I.E. IN	I.E. OUT
SV-3A	Sloped & Flared HW	506.15'		(SV-3) 502.50
SV-3B	Sloped & Flared HW	505.80'	(SV-3) 502.15	
SV-4A	Sloped & Flared HW	505.08'		(SV-4) 501.85
SV-4B	Sloped & Flared HW	504.73'	(SV-4) 501.50	
SV-5A	Sloped & Flared HW	504.08'		(SV-5) 500.35
SV-5B	Sloped & Flared HW	503.73'	(SV-5) 500.00	
SV-6A	R-Wall Penetration	501.65'		(SV-6) 499.00
SV-7A	48" Dia. Dbl. Curb Inlet	502.71'	(SV-6) 498.92	(SV-7) 498.92
SV-8A	48" Dia. Dbl. Curb Inlet	502.71'	(SV-7) 498.65	(SV-8) 498.65
SV-9A	Dry Laid Stone HW	500.21'		(SV-9) 498.50
SV-9B	Dry Laid Stone HW	501.27'	(SV-8) 498.00 (SV-9) 498.00	

PIPE SCHEDULE			
NAME	SIZE & TYPE	LENGTH	SLOPE
SH-0	24 inch Concrete Pipe	36.93'	2.71%
SH-1	15 inch Concrete Pipe	40.00'	6.25%
SH-2	15 inch Concrete Pipe	43.42'	4.15%
SH-3	15 inch Concrete Pipe	58.50'	11.97%
SH-4	15 inch Concrete Pipe	48.50'	10.31%
SH-5	36 inch Concrete Pipe	187.83'	3.19%
SH-6	15 inch Concrete Pipe	35.00'	7.14%
SV-0	38 x 24 inch Concrete Horizontal Elliptical Culvert	41.76'	2.39%
SV-1	30 x 19 inch Concrete Horizontal Elliptical Culvert	43.50'	1.15%
SV-2	91 x 58 inch Concrete Horizontal Elliptical Culvert	57.47'	1.04%
SV-3	53 x 34 inch Concrete Horizontal Elliptical Culvert	35.00'	1.00%
SV-4	45 x 29 inch Concrete Horizontal Elliptical Culvert	35.00'	1.00%
SV-5	45 x 29 inch Concrete Horizontal Elliptical Culvert	35.00'	1.00%
SV-6	24 inch Concrete Pipe	7.81'	1.02%
SV-7	24 inch Concrete Pipe	23.43'	1.15%
SV-8	24 inch Concrete Pipe	34.45'	1.89%
SV-9	38 x 24 inch Concrete Horizontal Elliptical Culvert	45.38'	1.10%

PIPE AND STRUCTURE KEY

1. DRY LAID STONE HEADWALLS ARE PER DETAIL, SHEET C6.1.
2. SLOPED AND FLARED HEADWALLS 12"-27" ARE PER KYTC STANDARD DRAWING RDH-020-03.
3. SLOPED AND FLARED HEADWALLS 30" AND LARGER ARE PER KYTC STANDARD DRAWING RDH-110-02 OR RDH-120-02.
4. RETAINING WALL PENETRATION, SEE "RW" SERIES FOR DETAILS.
5. MSD DRIVEWAY END TREATMENT IS PER MSD STANDARD DRAWING DE-03-01.
6. 48" DIAMETER DOUBLE CURB INLETS ARE PER MSD STANDARD DRAWING GM-02-04 AND DG-04-03.
7. 48" DIAMETER BEEHIVE INLETS ARE PER MSD STANDARD DRAWING GM-02-04 WITH NEENAH BEEHIVE FRAME AND GRATE R-2560-E2.
8. TUNNEL WALL PENETRATION PER WALL STRUCTURAL DRAWING, SHEET RW-C1.9.
9. REINFORCED CONCRETE PIPE TO BE CLASS III.
10. PVC PIPE TO BE SDR-35.
11. DISTURBED AREAS ADJACENT TO PARK ROAD SHALL BE FINAL STABILIZED PER THE FOLLOWING SCHEDULE:
    *AROUND ALL CULVERTS WITH SLOPES FLATTER THAN 3:1-USE MOWN LAWN SOD.
    *AROUND 24" CULVERTS OR SMALLER WITH SLOPES 3:1 AND STEEPER-USE "DRY CHANNEL BANK STABILIZATION" (SEE SHEET C9.1).
    *AROUND CULVERTS LARGER THAN 24" WITH SLOPES 3:1 AND STEEPER-USE "WET CHANNEL BANK STABILIZATION" (SEE SHEET C9.1).
12. DISTURBED AREAS ADJACENT TO LOOP TRAIL AND EXCURSION TRAIL IN NON WOODED AREA SHALL BE FINAL STABILIZED PER THE FOLLOWING SCHEDULE:.
    *AROUND ALL CULVERTS WITH SLOPES FLATTER THAN 3:1-SEED WITH WILDFLOWER/MEADOW WET RIPARIAN MIX AND PROTECT WITH NORTH AMERICAN GREEN S150 STRAW BLANKET INSTALLED PER MSD DETAIL EC-07-01.
    *AROUND 24" CULVERTS OR SMALLER WITH SLOPES 3:1 AND STEEPER-USE "DRY CHANNEL BANK STABILIZATION".
    *AROUND CULVERTS LARGER THAN 24" WITH SLOPES 3:1 AND STEEPER-USE "WET CHANNEL BANK STABILIZATION".

Seals

STATE OF KENTUCKY
ROBERT D. MARTIN
15958
LICENSED
PROFESSIONAL ENGINEER
Robert D. Martin 5/8/13

Engineering
Planning
1046 East Chestnut Street, Louisville, Kentucky 40204
Phone: 502.584.6222 Licensed in Kentucky
Kentucky • Indiana • Georgia • Tennessee • Florida

LANDSCAPE ARCHITECT
WRT
Wallace Roberts & Todd, LLC
1700 Market Street
28th Floor
Philadelphia, PA 19103
tel 215.732.5215
fax 215.732.2551

Architect
BRAVURA
111 West Washington Street
Louisville, Kentucky 40202
T: (502) 584-9900
F: (502) 584-0829

The Parklands of Floyds Fork, Project 4A

The Strand, Turkey Run Park and Broad Run
Louisville, Kentucky

Owner:
21st Century Parks, Inc.
371 W. Main St., Suite 202
Louisville, Kentucky 40202

REV #	DATE	DESCRIPTION
2	05-30-2013	Addendum#2: Added Excursion Trail Pipe and Structure Schedules

Job No: 12300.4AC
Date: May 8, 2013
Scale: 1" = 100'
Drawn By:

BID SET

Drawing Title:
Parklands of Floyds Fork
Sugar Hill PROJECT 4A Pipe and Structure Summary

Drawing No:
SH-C3.0

May 30, 2013 - 2:24pm
C:\Users\Victor Pan-NT\appdata\local\temp\AcPublish_4892\12300AC-100-PIPE AND STRUCTURE SUMMARY.dwg (SH-C3.0)

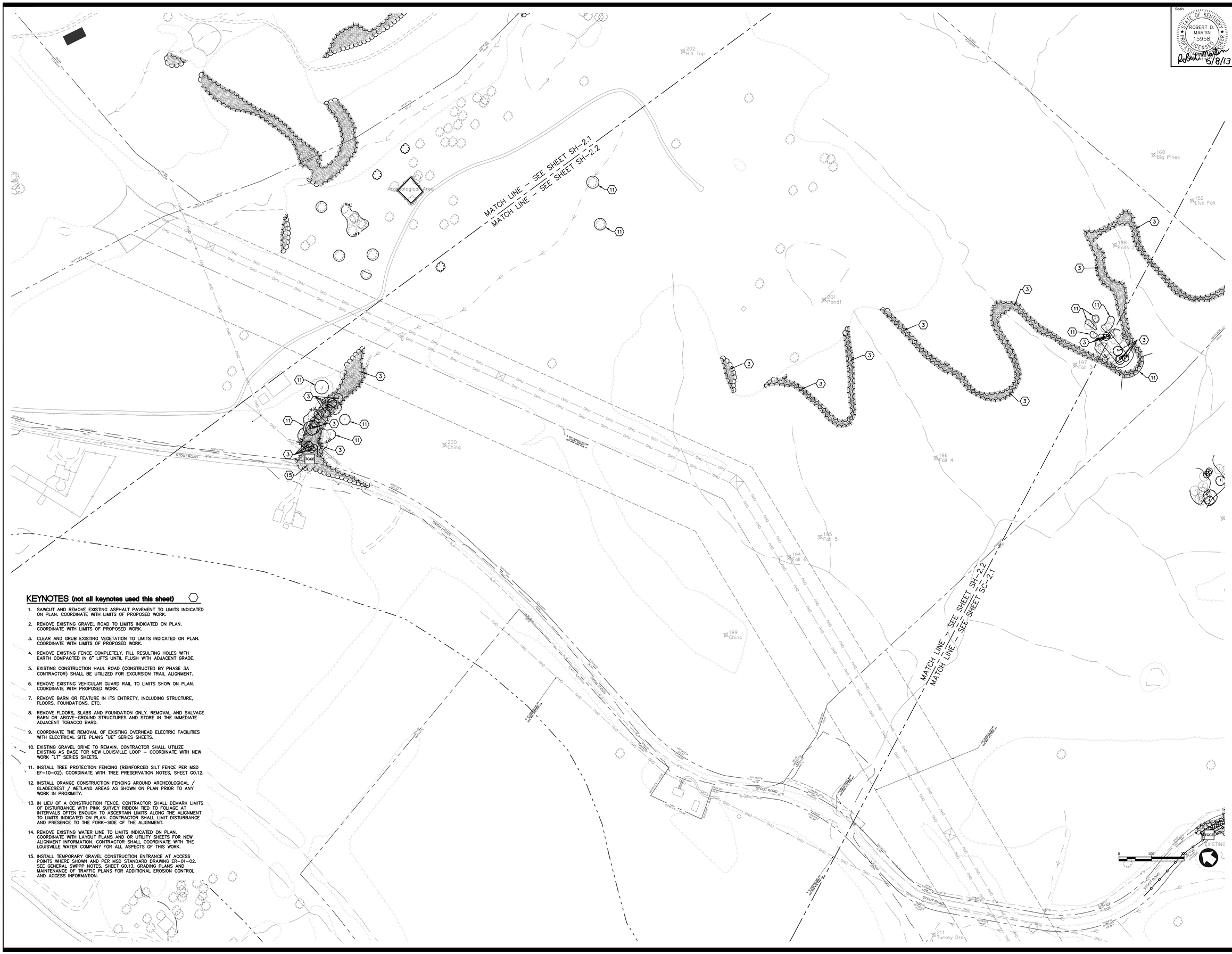

KEYNOTES (not all keynotes used this sheet)

1. SAWCUT AND REMOVE EXISTING ASPHALT PAVEMENT TO LIMITS INDICATED ON PLAN. COORDINATE WITH LIMITS OF PROPOSED WORK.
2. REMOVE EXISTING GRAVEL ROAD TO LIMITS INDICATED ON PLAN. COORDINATE WITH LIMITS OF PROPOSED WORK.
3. CLEAR AND GRUB EXISTING VEGETATION TO LIMITS INDICATED ON PLAN. COORDINATE WITH LIMITS OF PROPOSED WORK.
4. REMOVE EXISTING FENCE COMPLETELY. FILL RESULTING HOLES WITH EARTH COMPACTED IN 6" LIFTS UNTIL FLUSH WITH ADJACENT GRADE.
5. EXISTING CONSTRUCTION HAUL ROAD (CONSTRUCTED BY PHASE 3A CONTRACTOR) SHALL BE UTILIZED FOR EXCURSION TRAIL ALIGNMENT.
6. REMOVE EXISTING VEHICULAR GUARD RAIL TO LIMITS SHOW ON PLAN. COORDINATE WITH PROPOSED WORK.
7. REMOVE BARN OR FEATURE IN ITS ENTIRETY, INCLUDING STRUCTURE, FLOORS, FOUNDATIONS, ETC.
8. REMOVE FLOORS, SLABS AND FOUNDATION ONLY. REMOVAL AND SALVAGE BARN OR ABOVE-GROUND STRUCTURES AND STORE IN THE IMMEDIATE ADJACENT TOBACCO BARD.
9. COORDINATE THE REMOVAL OF EXISTING OVERHEAD ELECTRIC FACILITIES WITH ELECTRICAL SITE PLANS "UE" SERIES SHEETS.
10. EXISTING GRAVEL DRIVE TO REMAIN. CONTRACTOR SHALL UTILIZE EXISTING AS BASE FOR NEW LOUISVILLE LOOP – COORDINATE WITH NEW WORK "LT" SERIES SHEETS.
11. INSTALL TREE PROTECTION FENCING (REINFORCED SILT FENCE PER MSD EF-10-02). COORDINATE WITH TREE PRESERVATION NOTES, SHEET G0.12.
12. INSTALL ORANGE CONSTRUCTION FENCING AROUND ARCHEOLOGICAL / CLADECREST / WETLAND AREAS AS SHOWN ON PLAN PRIOR TO ANY WORK IN PROXIMITY.
13. IN LIEU OF A CONSTRUCTION FENCE, CONTRACTOR SHALL DEMARK LIMITS OF DISTURBANCE WITH PINK SURVEY RIBBON TIED TO FOLIAGE AT INTERVALS OFTEN ENOUGH TO ASCERTAIN LIMITS ALONG THE ALIGNMENT TO LIMITS INDICATED ON PLAN. CONTRACTOR SHALL LIMIT DISTURBANCE AND PRESENCE TO THE FORK-SIDE OF THE ALIGNMENT.
14. REMOVE EXISTING WATER LINE TO LIMITS INDICATED ON PLAN. COORDINATE WITH LAYOUT PLANS AND OR UTILITY SHEETS FOR NEW ALIGNMENT INFORMATION. CONTRACTOR SHALL COORDINATE WITH THE LOUISVILLE WATER COMPANY FOR ALL ASPECTS OF THIS WORK.
15. INSTALL TEMPORARY GRAVEL CONSTRUCTION ENTRANCE AT ACCESS POINTS WHERE SHOWN AND PER MSD STANDARD DRAWING ER-01-02. SEE GENERAL SWPPP NOTES, SHEET G0.13, GRADING PLANS AND MAINTENANCE OF TRAFFIC PLANS FOR ADDITIONAL EROSION CONTROL AND ACCESS INFORMATION.

Seals

STATE OF KENTUCKY
ROBERT D. MARTIN
15958
LICENSED
PROFESSIONAL ENGINEER
Robert D. Martin 5/8/13

Engineering
Planning

1046 East Chestnut Street Louisville, Kentucky 40204
Phone: 502.584.6262 Fax: 502.584.6269
Kentucky • Indiana • Georgia • Tennessee • Florida

LANDSCAPE ARCHITECT

WRT

Wallace Roberts & Todd, LLC

1700 Market Street
28th Floor
Philadelphia, PA 19103

tel 215.732.5215
fax 215.732.2551

Architect

BRAVURA

111 West Washington Street
Louisville, Kentucky 40202
T: (502) 584-9900
F: (502) 584-0829

The Parklands of Floyds Fork, Project 4A

The Strand, Turkey Run Park and Broad Run
Louisville, Kentucky

Owner:
21st Century Parks, Inc.
371 W. Main St., Suite 202
Louisville, Kentucky 40202

REV #	DATE	DESCRIPTION
2	05-30-2013	Addendum #2: Sheet Reissued Whole

Job No:	12300.4AC
Date:	May 8, 2013
Scale:	1" = 100'
Drawn By:	

BID SET

Drawing Title:

Parklands of Floyds Fork

Sugar Hill
PROJECT 4A
Demolition and Tree Preservation

Drawing No:

SH-C2.2

May 31, 2013 – 2:08pm
C:\Users\Tyler.PALM\Vaporstock\Acrcis\Vemp\ArcPublish_5d6\123004AC-100-DEMOLITION.dwg (SH-C2.2)

KEYNOTES (not all keynotes used this sheet)

1. SAWCUT AND REMOVE EXISTING ASPHALT PAVEMENT TO LIMITS INDICATED ON PLAN. COORDINATE WITH LIMITS OF PROPOSED WORK.
2. REMOVE EXISTING GRAVEL ROAD TO LIMITS INDICATED ON PLAN. COORDINATE WITH LIMITS OF PROPOSED WORK.
3. CLEAR AND GRUB EXISTING VEGETATION TO LIMITS INDICATED ON PLAN. COORDINATE WITH LIMITS OF PROPOSED WORK.
4. REMOVE EXISTING FENCE COMPLETELY. FILL RESULTING HOLES WITH EARTH COMPACTED IN 6" LIFTS UNTIL FLUSH WITH ADJACENT GRADE.
5. EXISTING CONSTRUCTION HAUL ROAD (CONSTRUCTED BY PHASE 3A CONTRACTOR) SHALL BE UTILIZED FOR EXCURSION TRAIL ALIGNMENT.
6. REMOVE EXISTING VEHICULAR GUARD RAIL TO LIMITS SHOW ON PLAN. COORDINATE WITH PROPOSED WORK.
7. REMOVE BARN OR FEATURE IN ITS ENTIRETY, INCLUDING STRUCTURE, FLOORS, FOUNDATIONS, ETC.
8. REMOVE FLOORS, SLABS AND FOUNDATION ONLY. REMOVAL AND SALVAGE BARN OR ABOVE-GROUND STRUCTURES AND STORE IN THE IMMEDIATE ADJACENT TOBACCO BARD.
9. COORDINATE THE REMOVAL OF EXISTING OVERHEAD ELECTRIC FACILITIES WITH ELECTRICAL SITE PLANS "UE" SERIES SHEETS.
10. EXISTING GRAVEL DRIVE TO REMAIN. CONTRACTOR SHALL UTILIZE EXISTING AS BASE FOR NEW LOUISVILLE LOOP – COORDINATE WITH NEW WORK "LT" SERIES SHEETS.
11. INSTALL TREE PROTECTION FENCING (REINFORCED SILT FENCE PER MSD EF-10-02). COORDINATE WITH TREE PRESERVATION NOTES, SHEET G0.12.
12. INSTALL ORANGE CONSTRUCTION FENCING AROUND ARCHEOLOGICAL / GLADECREST / WETLAND AREAS AS SHOWN ON PLAN PRIOR TO ANY WORK IN PROXIMITY.
13. IN LIEU OF A CONSTRUCTION FENCE, CONTRACTOR SHALL DEMARK LIMITS OF DISTURBANCE WITH PINK SURVEY RIBBON TIED TO FOLIAGE AT INTERVALS OFTEN ENOUGH TO ASCERTAIN LIMITS ALONG THE ALIGNMENT TO LIMITS INDICATED ON PLAN. CONTRACTOR SHALL LIMIT DISTURBANCE AND PRESENCE TO THE FORK-SIDE OF THE ALIGNMENT.
14. REMOVE EXISTING WATER LINE TO LIMITS INDICATED ON PLAN. COORDINATE WITH LAYOUT PLANS AND OR UTILITY SHEETS FOR NEW ALIGNMENT INFORMATION. CONTRACTOR SHALL COORDINATE WITH THE LOUISVILLE WATER COMPANY FOR ALL ASPECTS OF THIS WORK.
15. INSTALL TEMPORARY GRAVEL CONSTRUCTION ENTRANCE AT ACCESS POINTS WHERE SHOWN AND PER MSD STANDARD DRAWING ER-01-02. SEE GENERAL SWPPP NOTES, SHEET G0.13, GRADING PLANS AND MAINTENANCE OF TRAFFIC PLANS FOR ADDITIONAL EROSION CONTROL AND ACCESS INFORMATION.

MATCH LINE – SEE SHEET SH-2.1
MATCH LINE – SEE SHEET SV-2.1

MATCH LINE – SEE SHEET SH-2.1
MATCH LINE – SEE SHEET SV-2.1

#2 Hill Top
#2 Scarp Fall
#4 Bur Oak
#1 Trees Fall
#7 Pool/riffl
#3 Oak Ledge
#00 Chinq
Archeological Area
STOUT ROAD
BROAD RIDGE

0 100' 200'

Seals

STATE OF KENTUCKY
ROBERT D. MARTIN
15958
LICENSED
PROFESSIONAL ENGINEER
Robert D. Martin 5/8/13

Engineering
Planning

1046 East Chestnut Street, Louisville, Kentucky 40204
502.584.6300 www.qkcompanies.com
Kentucky • Indiana • Georgia • Tennessee • Florida

LANDSCAPE ARCHITECT
WRT

Wallace Roberts & Todd, LLC
1700 Market Street
28th Floor
Philadelphia, PA 19103
tel 215.732.5215
fax 215.732.2551

Architect
BRAVURA
111 West Washington Street
Louisville, Kentucky 40202
T: (502) 584-9900
F: (502) 584-0829

The Parklands of Floyds Fork, Project 4A

The Strand, Turkey Run Park and Broad Run
Louisville, Kentucky

Owner:
21st Century Parks, Inc.
371 W. Main St., Suite 202
Louisville, Kentucky 40202

REV #	DATE	DESCRIPTION
2	05-30-2013	Addendum #2: Sheet Reissued Whole

Job No: **12300.4AC**
Date: **May 8, 2013**
Scale: **1" = 100'**
Drawn By:
BID SET

Drawing Title:
Parklands of Floyds Fork
Sugar Hill
PROJECT 4A
Demolition and Tree Preservaton

Drawing No:
SH-C2.1

May 31, 2013 - 2:08pm
C:\Users\Victor.Pan-NT\Appdata\Local\Temp\AcePublish_596\12300.4AC-100-DEMOLITION.dwg (SH-C2.1)

LOUISVILLE LOOP TRAIL – SEE "LT" SERIES SHEETS

EXCURSION TRAIL – SEE "ET" SERIES SHEETS

RETAINING WALL – SEE "A3" SERIES SHEETS

PARK ROAD – SEE "PR" SERIES SHEETS

RETAINING WALL – SEE "RW" SERIES SHEETS

WALL – SEE "A7" SERIES SHEETS

PARK ROAD – SEE "PR" SERIES SHEETS

SF#SC–C5.1–1

Tobacco Barn

Livestock Barn

Silo

Feeding Barn

EXISTING POND

KEYNOTES (not all keynotes used this sheet)

1. CONSTRUCT CONTOURED–BOTTOM SOD SWALE WHERE INDICATED ON PLAN AND PER DETAIL 1, SHEET C9.2.
2. CONTRACTOR SHALL INSTALL COFFERDAM AS NECESSARY TO FACILITATE CANOE LAUNCH CONSTRUCTION. COORDINATE WITH GENERAL SWPPP NOTES, SHEET G0.12. CONTRACTOR SHALL WORK WITH THE MSD INSPECTOR AND DEVISE A COFFER DAM SYSTEM AND IMPLEMENTATION PLAN AND SUBMIT TO OWNER'S ENGINEER FOR REVIEW IN THE FORM OF A SHOP DRAWING SUBMITTAL PRIOR TO ANY CONSTRUCTION.
3. INSTALL SILO CENTER BASIN WHERE INDICATED ON PLAN AND PER DETAIL 14, SHEET C9.1. COORDINATE WITH PIPE AND STRUCTURE SUMMARY SHEETS.
4. MOWN LAWN TRAIL – GRADE THE SILO CENTER MOUND TO CREATE A BENCH TO ACCOMMODATE THE MOWN LAWN TRAIL AS INDICATED ON PLAN. SEED AREA WITH MOWN LAWN MIX. SEED ALL REMAINING AREAS OF THE SILO CENTER MOUND WITH WILDFLOWER MEADOW MIX – DRY.
5. PORCH LAWN – GRADE AREA AS INDICATED ON PLAN. SEED WITH MOWN LAWN MIX.
6. INSTALL 20'(long) x 4'(wide) SCOUR STOP AT END OF FLUME / CURB DEPRESSION WHERE INDICATED ON PLAN AND PER DETAIL 2, SHEET C9.2.

GENERAL NOTES

A. SEE C3 SERIES SHEETS FOR ALL PIPE AND STRUCTURE INFORMATION.

B. COORDINATE WITH GENERAL SWPPP NOTES FOR LINEAR CONSTRUCTION ON SHEET G0.12 FOR EROSION CONTROL MEASURES PERTAINING TO PARK ROAD, LOUISVILLE LOOP AND EXCURSION TRAIL CONSTRUCTION.

C. SEE PR–SERIES PLANS FOR ALL ROADSIDE DITCH INFORMATION.

D. SEE LT–SERIES PLANS FOR ALL TRAILSIDE DITCH INFORMATION.

E. SEE G0.12 FOR SEEDING MIXTURES AND AREAS OF APPLICATION.

SWPPP PHASING

A. PERFORM SITE CLEARING OPERATIONS AS REQUIRED TO FACILITATE CONSTRUCTION

B. INSTALL SILT FENCE SF#SC–C5.1–1

C. PERFORM DEMOLITION OF EXISTING ASPHALT PAVEMENT.

D. ROUGH GRADE AREA OF PARKING LOT, TRAIL HEAD AND PARK ROAD INCLUDING ROADSIDE DITCH.

E. INSTALL STORM PIPES AND STONE BAG INLET PROTECTION.

F. ROCK PARKING AREA.

G. INSTALL NEW WATER MAIN ALONG NEW STOUT ROAD ALIGNMENT.

H. REMOVE EXISTING WATER MAIN.

I. FINAL GRADE ROADSIDE DITCH AND STABILIZE IMMEDIATELY WITH APPROPRIATE SEED MIX.

J. INSTALL SCOUR STOP DEVICES.

K. CONSTRUCT MOUND.

L. STABILIZE MOUND SLOPE IMMEDIATELY UPON REACHING FINAL GRADE.

M. INSTALL ALL UTILITIES TO TRAIL HEAD AND SEPTIC FIELD.

N. CONSTRUCT CONCRETE RETAINING WALL INTEGRAL TO TRAIL HEAD.

O. CONSTRUCT CONCRETE SIDEWALK AND CONCRETE CURBS.

P. CONSTRUCT TRAIL HEAD STRUCTURE.

Q. FINAL GRADE ALL AREAS SURROUNDING PARKING LOT AND TRAIL HEAD AND IMMEDIATELY STABILIZE WITH APPROPRIATE SEED MIX.

R. CONSTRUCT ASPHALT PAVEMENT.

S. CLEAN EVERY TWO WEEKS AND AFTER EACH RAINFALL EVENT OF 0.5" OR GREATER.

T. REMOVE ALL BMPs AFTER SITE IS STABILIZED.

U. NOT ALL BMP's DEPICTED ON THIS SHEET ARE INCLUDED IN THE SWPPP PHASING NOTES ABOVE. COORDINATE WITH "PR" SERIES SHEETS AND "LT" SERIES SHEETS FOR ADDITIONAL BMP's AND SWPPP PHASING NOTES.

BMP LEGEND

- SBIP — STONE BAG INLET PROTECTION EF–03/05/06–02
- TGCE — TEMPORARY GRAVEL CONST. ENTRANCE/EXIT ER–01–02
- OS — SCOUR STOP PAD OUTLET STABILIZATION
- PE — PIPE INLET PROTECTION PER DETAIL 1, SHEET G0.13.
- SF#X — REINFORCED SILT FENCE EF–10–02
- DC#X — ROCK DITCH CHECK EB–03–01
- TEMPORARY COFFER DAM
- PUMP AROUND FLOW DIVERSION ED–01–01

0 40' 80'

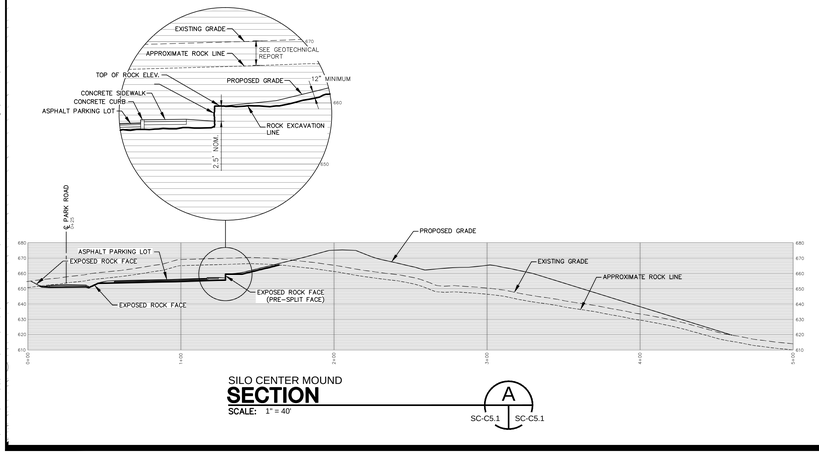

SILO CENTER MOUND
SECTION
SCALE: 1" = 40

A
SC–C5.1 SC–C5.1

Seals

STATE OF KENTUCKY
ROBERT D. MARTIN
15958
LICENSED
PROFESSIONAL ENGINEER
Robert D. Martin
5/8/13

Engineering
Planning

1046 East Chestnut Street, Louisville, Kentucky 40204
502.584.6300 www.qkpartners.com
Kentucky • Indiana • Georgia • Tennessee • Florida

LANDSCAPE ARCHITECT
WRT
Wallace Roberts & Todd, LLC
1700 Market Street
28th Floor
Philadelphia, PA 19103
tel 215.732.5215
fax 215.732.2551

Architect
BRAVURA
111 West Washington Street
Louisville, Kentucky 40202
T: (502) 584-9900
F: (502) 584-0829

The Parklands of Floyds Fork, Project 4A
The Strand, Turkey Run Park and Broad Run
Louisville, Kentucky

Owner:
21st Century Parks, Inc.
371 W. Main St., Suite 202
Louisville, Kentucky 40202

REV #	DATE	DESCRIPTION
2	05-30-2013	Addendum2. Rev. wall ref. and spot elev. values. MSD comments

Job No: 12300.4AC
Date: May 8, 2013
Scale: 1" = 40'
Drawn By:
BID SET

Drawing Title:
Parklands of Floyds Fork
Silo Center
PROJECT 4A
Trail Head
Grading, Drainage and SWPPP

Drawing No:
SC-C5.1

May 31, 2013 – 2:02pm
C:\Users\tord.stagstad\Local\Temp\AcPublish_5108\12300.4AC–040–SITE–GRADING.dwg (SC–C5.1)

Seals

STATE OF KENTUCKY
ROBERT D. MARTIN
15958
LICENSED
PROFESSIONAL ENGINEER
5/8/13

KEYNOTES (not all keynotes used this sheet)

1. CONSTRUCT ASPHALT PAVEMENT TO LIMITS INDICATED ON PLAN AND PER DETAIL 1, SHEET C9.1.
2. CONSTRUCT CONCRETE HEADER CURB TO LIMITS INDICATED ON PLAN AND PER DETAIL 4, SHEET C9.1.
3. CONSTRUCT CONCRETE CURB TAPER WHERE INDICATED ON PLAN AND PER DETAIL 5, SHEET C9.1.
4. "VAN ACCESSIBLE" PARKING STALL STRIPING – COORDINATE WITH "RS" SERIES SHEETS.
5. STANDARD ACCESSIBLE PARKING STALL STRIPING – COORDINATE WITH "RS" SERIES SHEETS.
6. PARKING STALL STRIPING – COORDINATE WITH "RS" SERIES SHEETS.
7. HANDICAP PARKING SIGN – COORDINATE WITH "RS" SERIES SHEETS.
8. STOP SIGN – COORDINATE WITH "RS" SERIES SHEETS.
9. "STOP" AND STOP BAR – COORDINATE WITH "RS" SERIES SHEETS.
10. CONSTRUCT CONCRETE SIDEWALK TO LIMITS INDICATED ON PLAN AND PER DETAIL 6, SHEET C9.1.
11. INSTALL LIMESTONE BENCH SEATING WHERE INDICATED ON PLAN AND PER DETAIL 7, SHEET C9.1.
12. INSTALL TEMPORARY CONSTRUCTION FENCE WHERE INDICATED ON PLAN. INSTALL FENCE PRIOR TO ANY NEW CONSTRUCTION OR LAND DISTURBING ACTIVITY.
13. CONSTRUCT CONCRETE FLUME WHERE INDICATED ON PLAN AND PER DETAIL 8, SHEET C9.1.
14. CONSTRUCT CONCRETE CURB BREAK WHERE INDICATED ON PLAN AND PER DETAIL 12, SHEET C9.1.
15. INSTALL FORD CROSSING WHERE INDICATED ON PLAN AND PER DETAIL 13, SHEET C9.1.
16. INSTALL 12' WIDE GRASSY PAVER ACCESS DRIVE (MAINTENANCE AND SERVICE VEHICLES) WHERE INDICATED ON PLAN AND PER DETAIL 5, SHEET 9.2.

Engineering
Planning
1046 East Chestnut Street, Louisville, Kentucky 40204
Phone: (502) 584-7999 Internet: www.qkpsc.com
Kentucky • Indiana • Georgia • Tennessee • Florida

LANDSCAPE ARCHITECT
WRT
Wallace Roberts & Todd, LLC
1700 Market Street
28th Floor
Philadelphia, PA 19103
tel 215.732.5215
fax 215.732.2551

Architect
BRAVURA
111 West Washington Street
Louisville, Kentucky 40202
T: (502) 584-9900
F: (502) 584-0829

The Parklands of Floyds Fork, Project 4A

The Strand, Turkey Run Park and Broad Run
Louisville, Kentucky

Owner:
21st Century Parks, Inc.
371 W. Main St., Suite 202
Louisville, Kentucky 40202

REV #	DATE	DESCRIPTION
2	05-30-2013	Addendum #2: Clarified limits of concrete curb and grassy paver

Job No:	12300.4AC
Date:	May 8, 2013
Scale:	1" = 40'
Drawn By:	

BID SET

Drawing Title:

Parklands of Floyds Fork

Silo Center PROJECT 4A Trail Head Layout

Drawing No:

SC-C4.1

0 40' 80'

May 30, 2013 - 9:55am
N:\12300.4AC - 21st Century Parks Phase 4A\SITE\Dwgs\CDoc\12300.4AC-040-SITE-LAYOUT.dwg (SC-C4.1)

STRUCTURE SCHEDULE				
NAME	TYPE	RIM/TW EL.	I.E. IN	I.E. OUT
SC-6A	Dry Laid Stone HW	532.21'		(SC-6) 530.00
SC-6B	Dry Laid Stone HW	531.21'	(SC-6) 529.00	
SC-7A	Dry Laid Stone HW	585.21'		(SC-7) 583.00
SC-7B	Dry Laid Stone HW	582.21'	(SC-7) 580.00	
SC-8A	Dry Laid Stone HW	605.21'		(SC-8) 603.00
SC-8B	Dry Laid Stone HW	604.21'	(SC-8) 602.00	
SC-9A	Dry Laid Stone HW	618.21'		(SC-9) 616.00
SC-9B	Dry Laid Stone HW	616.21'	(SC-9) 614.00	
SC-10A	Dry Laid Stone HW	631.94'		(SC-10) 630.00
SC-10B	Dry Laid Stone HW	621.94'	(SC-10) 620.00	
SC-11A	Dry Laid Stone HW	630.94'		(SC-11) 629.00
SC-11B	Dry Laid Stone HW	627.94'	(SC-11) 626.00	
SC-12A	Dry Laid Stone HW	605.21'		(SC-12) 603.00
SC-12B	Dry Laid Stone HW	603.21'	(SC-12) 601.00	
SC-13A	Dry Laid Stone HW	602.21'		(SC-13) 600.00
SC-13B	Dry Laid Stone HW	601.21'	(SC-13) 599.00	
SC-14A	Dry Laid Stone HW	584.29'		(SC-14) 581.00
SC-14B	Dry Laid Stone HW	582.29'	(SC-14) 579.00	
SC-15A	Dry Laid Stone HW	562.21'		(SC-15) 560.00
SC-15B	Dry Laid Stone HW	561.21'	(SC-15) 559.00	
SC-99A	Dry Laid Stone HW	587.75'		(SC-99) 585.00
SC-99B	Dry Laid Stone HW	583.75'	(SC-99) 581.00	

PIPE SCHEDULE			
NAME	SIZE & TYPE	LENGTH	SLOPE
SC-6	15 inch Concrete Pipe	22.02'	4.54%
SC-7	24 inch Concrete Pipe	45.78'	6.55%
SC-8	18 inch Concrete Pipe	22.51'	4.44%
SC-9	18 inch Concrete Pipe	25.39'	7.88%
SC-10	15 inch Concrete Pipe	40.44'	24.73%
SC-11	15 inch Concrete Pipe	27.05'	11.09%
SC-12	24 inch Concrete Pipe	42.55'	4.70%
SC-13	18 inch Concrete Pipe	22.24'	4.50%
SC-14	30 inch Concrete Pipe	29.57'	6.76%
SC-15	18 inch Concrete Pipe	29.26'	3.42%
SC-99	24 inch Concrete Pipe	22.46'	17.81%

STRUCTURE SCHEDULE				
NAME	TYPE	RIM/TW EL.	I.E. IN	I.E. OUT
ET-1A	Dry Laid Stone HW	603.29'		(ET-1) 600.00
ET-1B	Dry Laid Stone HW	603.04'	(ET-1) 599.75	
ET-2A	Dry Laid Stone HW	643.44'		(ET-2) 641.50
ET-2B	Dry Laid Stone HW	643.24'	(ET-2) 641.30	
ET-3A	Dry Laid Stone HW	615.95'		(ET-3) 613.20
ET-3B	Dry Laid Stone HW	615.75'	(ET-3) 613.00	
ET-4A	Dry Laid Stone HW	614.41'		(ET-4) 612.20
ET-4B	Dry Laid Stone HW	614.21'	(ET-4) 612.00	
ET-5A	Dry Laid Stone HW	618.31'		(ET-5) 616.10
ET-5B	Dry Laid Stone HW	618.11'	(ET-5) 615.90	

PIPE SCHEDULE			
NAME	SIZE & TYPE	LENGTH	SLOPE
ET-1	30 inch Concrete Pipe	19.42'	1.29%
ET-2	15 inch Concrete Pipe	19.00'	1.05%
ET-3	24 inch Concrete Pipe	19.18'	1.04%
ET-4	18 inch Concrete Pipe	19.00'	1.05%
ET-5	18 inch Concrete Pipe	19.00'	1.05%

STRUCTURE SCHEDULE				
NAME	TYPE	RIM/TW EL.	I.E. IN	I.E. OUT
SC-1A	Dry Laid Stone HW	616.25'		(SC-1) 612.50
SC-1B	Dry Laid Stone HW	609.75'	(SC-1) 606.00	
SC-2A	48" Dia. Beehive Inlet	652.00'		(SC-2) 648.75
SC-3A	48" Dia. Beehive Inlet	653.50'		(SC-3) 650.25
SC-3B	Dry Laid Stone HW	646.94'	(SC-2) 645.00 (SC-3) 645.00	
SC-4A	Dry Laid Stone HW	646.49'		(SC-4) 644.55
SC-4B	Dry Laid Stone HW	645.94'	(SC-4) 644.00	
SC-5A	Dry Laid Stone HW	650.44'		(SC-5) 648.50
SC-5B	Dry Laid Stone HW	648.94'	(SC-5) 647.00	
SC-16A	Perf. Pipe Connection	648.54'		(SC-16) 648.00
SC-16B	MSD D-Way End Treatment	640.54'	(SC-16) 640.00	
SH-13A	Dry Laid Stone HW	646.49'		(SH-13) 505.00
SH-13B	Dry Laid Stone HW	645.94'	(SH-13) 504.00	

PIPE SCHEDULE			
NAME	SIZE & TYPE	LENGTH	SLOPE
SC-1	24 inch Concrete Pipe	52.00'	12.50%
SC-2	15 inch Concrete Pipe	78.54'	4.77%
SC-3	15 inch Concrete Pipe	89.95'	5.84%
SC-4	15 inch Concrete Pipe	54.55'	1.01%
SC-5	15 inch Concrete Pipe	68.90'	2.18%
SC-16	6.0 inch PVC Pipe	50.36'	15.88%
SH-13	15 inch Concrete Pipe	41.39'	2.42%

PIPE AND STRUCTURE KEY

1. DRY LAID STONE HEADWALLS ARE PER DETAIL, SHEET C6.1.
2. SLOPED AND FLARED HEADWALLS 12"-27" ARE PER KYTC STANDARD DRAWING RDH-020-03.
3. SLOPED AND FLARED HEADWALLS 30" AND LARGER ARE PER KYTC STANDARD DRAWING RDH-110-02 OR RDH-120-02.
4. RETAINING WALL PENETRATION, SEE "RW" SERIES FOR DETAILS.
5. MSD DRIVEWAY END TREATMENT IS PER MSD STANDARD DRAWING DE-03-01.
6. 48" DIAMETER DOUBLE CURB INLETS ARE PER MSD STANDARD DRAWING GM-02-04 AND DG-04-03.
7. 48" DIAMETER BEEHIVE INLETS ARE PER MSD STANDARD DRAWING GM-02-04 WITH NEENAH BEEHIVE FRAME AND GRATE R-2560-E2.
8. TUNNEL WALL PENETRATION PER WALL STRUCTURAL DRAWING, SHEET RW-C1.9.
9. REINFORCED CONCRETE PIPE TO BE CLASS III.
10. PVC PIPE TO BE SDR-35.
11. DISTURBED AREAS ADJACENT TO PARK ROAD SHALL BE FINAL STABILIZED PER THE FOLLOWING SCHEDULE:
    *AROUND ALL CULVERTS WITH SLOPES FLATTER THAN 3:1-USE MOWN LAWN SOD.
    *AROUND 24" CULVERTS OR SMALLER WITH SLOPES 3:1 AND STEEPER-USE "DRY CHANNEL BANK STABILIZATION" (SEE SHEET C9.1).
    *AROUND CULVERTS LARGER THAN 24" WITH SLOPES 3:1 AND STEEPER-USE "WET CHANNEL BANK STABILIZATION" (SEE SHEET C9.1).
12. DISTURBED AREAS ADJACENT TO LOOP TRAIL AND EXCURSION TRAIL IN NON WOODED AREA SHALL BE FINAL STABILIZED PER THE FOLLOWING SCHEDULE:.
    *AROUND ALL CULVERTS WITH SLOPES FLATTER THAN 3:1-SEED WITH WILDFLOWER/MEADOW WET RIPARIAN MIX AND PROTECT WITH NORTH AMERICAN GREEN S150 STRAW BLANKET INSTALLED PER MSD DETAIL EC-07-01.
    *AROUND 24" CULVERTS OR SMALLER WITH SLOPES 3:1 AND STEEPER-USE "DRY CHANNEL BANK STABILIZATION".
    *AROUND CULVERTS LARGER THAN 24" WITH SLOPES 3:1 AND STEEPER-USE "WET CHANNEL BANK STABILIZATION".

Seals

STATE OF KENTUCKY
ROBERT D. MARTIN
15958
LICENSED
PROFESSIONAL ENGINEER
5/8/13

Engineering
Planning
1046 East Chestnut Street, Louisville, Kentucky 40204
Phone: 502.584.6229 Licensed in Kentucky and Indiana
Kentucky • Indiana • Georgia • Tennessee • Florida

LANDSCAPE ARCHITECT
WRT
Wallace Roberts & Todd, LLC
1700 Market Street
28th Floor
Philadelphia, PA 19103
tel 215.732.5215
fax 215.732.2551

Architect
BRAVURA
111 West Washington Street
Louisville, Kentucky 40202
T: (502) 584-9900
F: (502) 584-0829

The Parklands of Floyds Fork, Project 4A
The Strand, Turkey Run Park and Broad Run
Louisville, Kentucky

Owner:
21st Century Parks, Inc.
371 W. Main St., Suite 202
Louisville, Kentucky 40202

REV #	DATE	DESCRIPTION
2	05-30-2013	Addendum#2: Added Excursion Trail Pipe and Structure Schedules

Job No: 12300.4AC
Date: May 8, 2013
Scale: 1" = 100'
Drawn By:
BID SET

Drawing Title:
Parklands of Floyds Fork
Silo Center PROJECT 4A Pipe and Structure Summary

Drawing No:
SC-C3.0

May 30, 2013 - 2:24pm
C:\Users\Tyler.PHLNT\Vaporstock\Local\Temp\AcPublish_4892\12300AC - 100-PIPE AND STRUCTURE SUMMARY.dwg (SC-C3.0)

KEYNOTES (not all keynotes used this sheet)

1. SAWCUT AND REMOVE EXISTING ASPHALT PAVEMENT TO LIMITS INDICATED ON PLAN. COORDINATE WITH LIMITS OF PROPOSED WORK.
2. REMOVE EXISTING GRAVEL ROAD TO LIMITS INDICATED ON PLAN. COORDINATE WITH LIMITS OF PROPOSED WORK.
3. CLEAR AND GRUB EXISTING VEGETATION TO LIMITS INDICATED ON PLAN. COORDINATE WITH LIMITS OF PROPOSED WORK.
4. REMOVE EXISTING FENCE COMPLETELY. FILL RESULTING HOLES WITH EARTH COMPACTED IN 6" LIFTS UNTIL FLUSH WITH ADJACENT GRADE.
5. EXISTING CONSTRUCTION HAUL ROAD (CONSTRUCTED BY PHASE 3A CONTRACTOR) SHALL BE UTILIZED FOR EXCURSION TRAIL ALIGNMENT.
6. REMOVE EXISTING VEHICULAR GUARD RAIL TO LIMITS SHOW ON PLAN. COORDINATE WITH PROPOSED WORK.
7. REMOVE BARN OR FEATURE IN ITS ENTIRETY, INCLUDING STRUCTURE, FLOORS, FOUNDATIONS, ETC.
8. REMOVE FLOORS, SLABS AND FOUNDATION ONLY. REMOVAL AND SALVAGE BARN OR ABOVE-GROUND STRUCTURES AND STORE IN THE IMMEDIATE ADJACENT TOBACCO BARD.
9. COORDINATE THE REMOVAL OF EXISTING OVERHEAD ELECTRIC FACILITIES WITH ELECTRICAL SITE PLANS "UE" SERIES SHEETS.
10. EXISTING GRAVEL DRIVE TO REMAIN. CONTRACTOR SHALL UTILIZE EXISTING AS BASE FOR NEW LOUISVILLE LOOP - COORDINATE WITH NEW WORK "LT" SERIES SHEETS.
11. INSTALL TREE PROTECTION FENCING (REINFORCED SILT FENCE PER MSD EF-10-02). COORDINATE WITH TREE PRESERVATION NOTES, SHEET G0.12.
12. INSTALL ORANGE CONSTRUCTION FENCING AROUND ARCHEOLOGICAL / GLADECREST / WETLAND AREAS AS SHOWN ON PLAN PRIOR TO ANY WORK IN PROXIMITY.
13. IN LIEU OF A CONSTRUCTION FENCE, CONTRACTOR SHALL DEMARK LIMITS OF DISTURBANCE WITH PINK SURVEY RIBBON TIED TO FOLIAGE AT INTERVALS OFTEN ENOUGH TO ASCERTAIN LIMITS ALONG THE ALIGNMENT TO LIMITS INDICATED ON PLAN. CONTRACTOR SHALL LIMIT DISTURBANCE AND PRESENCE TO THE FORK-SIDE OF THE ALIGNMENT.
14. REMOVE EXISTING WATER LINE TO LIMITS INDICATED ON PLAN. COORDINATE WITH LAYOUT PLANS AND OR UTILITY SHEETS FOR NEW ALIGNMENT INFORMATION. CONTRACTOR SHALL COORDINATE WITH THE LOUISVILLE WATER COMPANY FOR ALL ASPECTS OF THIS WORK.
15. INSTALL TEMPORARY GRAVEL CONSTRUCTION ENTRANCE AT ACCESS POINTS WHERE SHOWN AND PER MSD STANDARD DRAWING ER-01-02. SEE GENERAL SWPPP NOTES, SHEET G0.13, GRADING PLANS AND MAINTENANCE OF TRAFFIC PLANS FOR ADDITIONAL EROSION CONTROL AND ACCESS INFORMATION.

MATCH LINE – SEE SHEET BV-2.1

MATCH LINE – SEE SHEET SC-2.1

MATCH LINE – SEE SHEET SH-2.2 – SEE SHEET SC-2.1

EXISTING SHED STRUCTURE TO REMAIN UNDISTURBED

EXISTING TOBACCO BARN TO REMAIN UNDISTURBED

EXISTING SILO STRUCTURE TO REMAIN UNDISTURBED

EXISTING BARN TO REMAIN UNDISTURBED

EXISTING SILO STRUCTURE TO REMAIN UNDISTURBED

EXISTING SHED STRUCTURE TO REMAIN UNDISTURBED

EXISTING POND

STOUT ROAD

0 100' 200'

Seals

STATE OF KENTUCKY
ROBERT D. MARTIN
15958
LICENSED
PROFESSIONAL ENGINEER
5/8/13

Engineering
Planning

1046 East Chestnut Street, Louisville, Kentucky 40204
phone 502.584.6262 www.qkpartners.com
Kentucky • Indiana • Georgia • Tennessee • Florida

LANDSCAPE ARCHITECT
WRT
Wallace Roberts & Todd, LLC
1700 Market Street
28th Floor
Philadelphia, PA 19103
tel 215.732.5215
fax 215.732.2551

Architect
BRAVURA
111 West Washington Street
Louisville, Kentucky 40202
T: (502) 584-9900
F: (502) 584-0829

The Parklands of Floyds Fork, Project 4A
The Strand, Turkey Run Park and Broad Run
Louisville, Kentucky

Owner:
21st Century Parks, Inc.
371 W. Main St., Suite 202
Louisville, Kentucky 40202

REV #	DATE	DESCRIPTION
2	05-30-2013	Addendum #2: Sheet Reissued Whole

Job No:	12300.4AC
Date:	May 8, 2013
Scale:	1" = 100'
Drawn By:	

BID SET

Drawing Title:

Parklands of Floyds Fork

Silo Center PROJECT 4A Demolition and Tree Preservation

Drawing No:

SC-C2.1

May 31, 2013 – 2:08pm
C:\Users\Quiet PC-NT\Dropbox\Work Items_MrPublish_SW\12300AC--100--DEMOLITION.dwg (SC-C2.1)

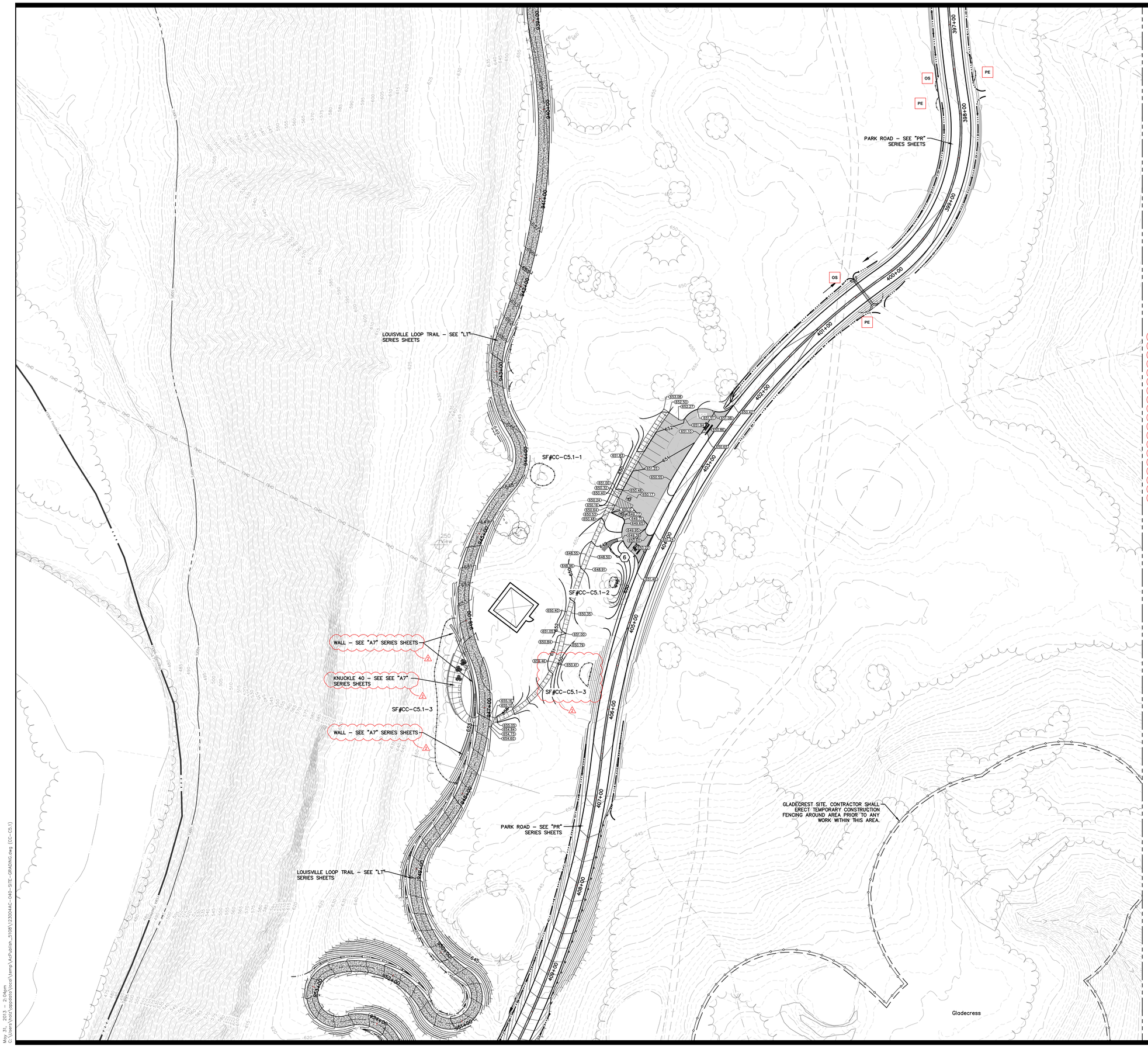
LOUISVILLE LOOP TRAIL – SEE "LT" SERIES SHEETS
PARK ROAD – SEE "PR" SERIES SHEETS
SF#CC–C5.1–1
SF#CC–C5.1–2
SF#CC–C5.1–3
WALL – SEE "A7" SERIES SHEETS
KNUCKLE 40 – SEE SEE "A7" SERIES SHEETS
SF#CC–C5.1–3
WALL – SEE "A7" SERIES SHEETS
PARK ROAD – SEE "PR" SERIES SHEETS
LOUISVILLE LOOP TRAIL – SEE "LT" SERIES SHEETS
GLADECREST SITE. CONTRACTOR SHALL ERECT TEMPORARY CONSTRUCTION FENCING AROUND AREA PRIOR TO ANY WORK WITHIN THIS AREA.
Gladecress
OS
PE
397+00
398+00
399+00
400+00
401+00
402+00
403+00
404+00
405+00
406+00
407+00
408+00
409+00
422+00
423+00
424+00
425+00
426+00
427+00
428+00
429+00
430+00
431+00
432+00
433+00
434+00
435+00
436+00
437+00
438+00
439+00
440+00
441+00
442+00
443+00
444+00
445+00
446+00
447+00
448+00
449+00
450+00
451+00
452+00
453+00
454+00
455+00
456+00
457+00
458+00
459+00
460+00
461+00

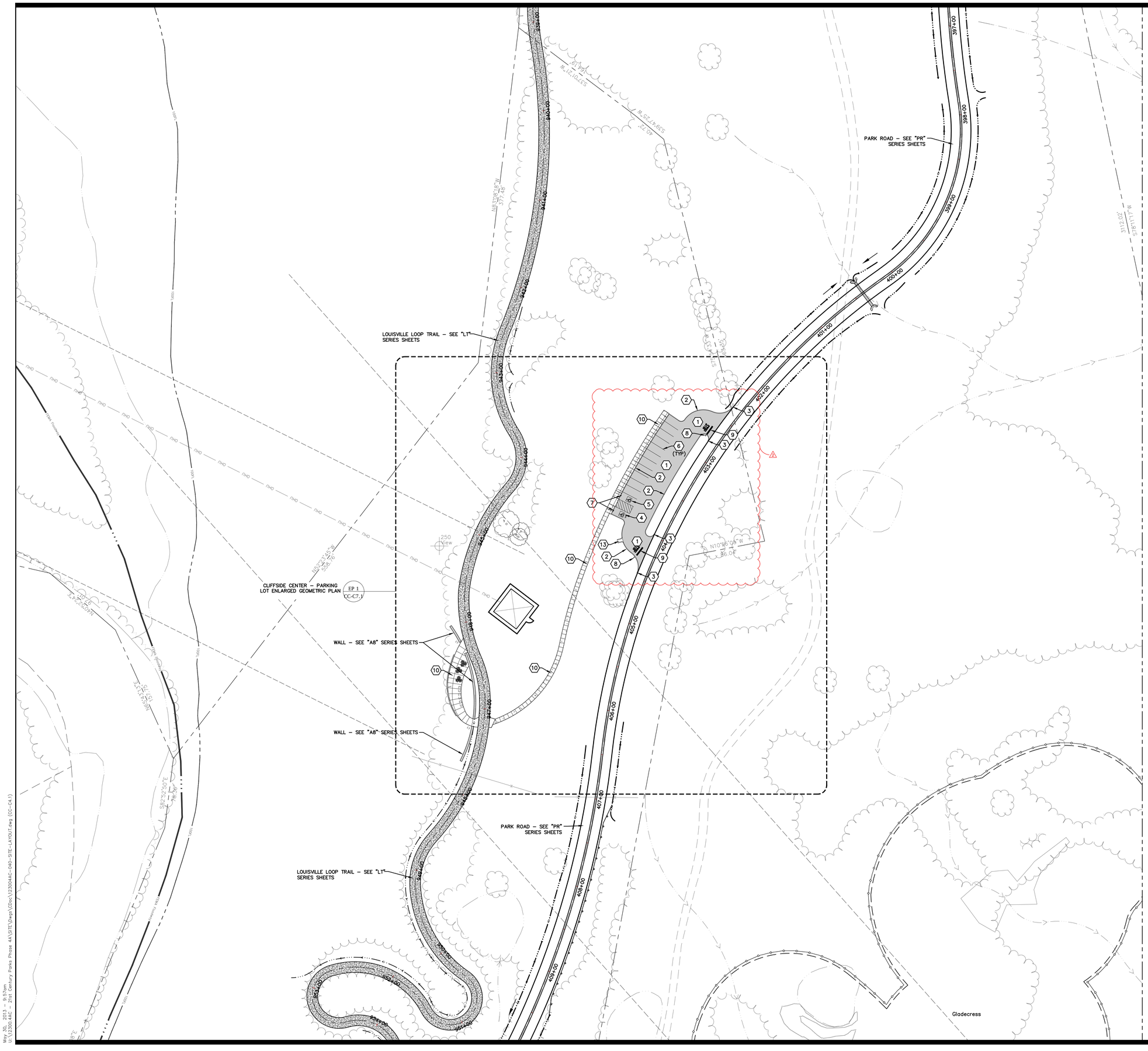

KEYNOTES (not all keynotes used this sheet)

1. CONSTRUCT ASPHALT PAVEMENT TO LIMITS INDICATED ON PLAN AND PER DETAIL 1, SHEET C9.1.
2. CONSTRUCT CONCRETE HEADER CURB TO LIMITS INDICATED ON PLAN AND PER DETAIL 4, SHEET C9.1.
3. CONSTRUCT CONCRETE CURB TAPER WHERE INDICATED ON PLAN AND PER DETAIL 5, SHEET C9.1.
4. "VAN ACCESSIBLE" PARKING STALL STRIPING – COORDINATE WITH "RS" SERIES SHEETS.
5. STANDARD ACCESSIBLE PARKING STALL STRIPING – COORDINATE WITH "RS" SERIES SHEETS.
6. PARKING STALL STRIPING – COORDINATE WITH "RS" SERIES SHEETS.
7. HANDICAP PARKING SIGN – COORDINATE WITH "RS" SERIES SHEETS.
8. STOP SIGN – COORDINATE WITH "RS" SERIES SHEETS.
9. "STOP" AND STOP BAR – COORDINATE WITH "RS" SERIES SHEETS.
10. CONSTRUCT CONCRETE SIDEWALK TO LIMITS INDICATED ON PLAN AND PER DETAIL 6, SHEET C9.1.
11. INSTALL LIMESTONE BENCH SEATING WHERE INDICATED ON PLAN AND PER DETAIL 7, SHEET C9.1.
12. INSTALL TEMPORARY CONSTRUCTION FENCE WHERE INDICATED ON PLAN. INSTALL FENCE PRIOR TO ANY NEW CONSTRUCTION OR LAND DISTURBING ACTIVITY.
13. CONSTRUCT CONCRETE FLUME WHERE INDICATED ON PLAN AND PER DETAIL 8, SHEET C9.1.
14. CONSTRUCT CONCRETE CURB BREAK WHERE INDICATED ON PLAN AND PER DETAIL 12, SHEET C9.1.
15. INSTALL FORD CROSSING WHERE INDICATED ON PLAN AND PER DETAIL 13, SHEET C9.1.
16. INSTALL 12' WIDE GRASSY PAVER ACCESS DRIVE (MAINTENANCE AND SERVICE VEHICLES) WHERE INDICATED ON PLAN AND PER DETAIL 5, SHEET 9.2.

Seals

STATE OF KENTUCKY
ROBERT D. MARTIN
15958
LICENSED
PROFESSIONAL ENGINEER
5/8/13

Engineering
Planning
1046 East Chestnut Street, Louisville, Kentucky 40204
Phone: (502) 584-7200 Internet: www.qkpe.com
Kentucky • Indiana • Georgia • Tennessee • Florida

LANDSCAPE ARCHITECT
WRT
Wallace Roberts & Todd, LLC
1700 Market Street
28th Floor
Philadelphia, PA 19103
tel 215.732.5215
fax 215.732.2551

Architect
BRAVURA
111 West Washington Street
Louisville, Kentucky 40202
T: (502) 584-9900
F: (502) 584-0829

The Parklands of Floyds Fork, Project 4A

The Strand, Turkey Run Park and Broad Run
Louisville, Kentucky

Owner:
21st Century Parks, Inc.
371 W. Main St., Suite 202
Louisville, Kentucky 40202

REV #	DATE	DESCRIPTION
2	05-30-2013	Addendum #2: Clarified limits of concrete curb

Job No:	12300.4AC
Date:	May 8, 2013
Scale:	1" = 40'
Drawn By:	

BID SET

Drawing Title:

Parklands of Floyds Fork

Cliffside Center PROJECT 4A Parking Lot Layout

Drawing No:

CC-C4.1

May 30, 2013 - 9:57am
U:\12300.4AC - 21st Century Parks Phase 4A\SITE\Dwgs\CDocs\12300.4AC-040-SITE-LAYOUT.dwg (CC-C4.1)

KEYNOTES (not all keynotes used this sheet)

1. SAWCUT AND REMOVE EXISTING ASPHALT PAVEMENT TO LIMITS INDICATED ON PLAN. COORDINATE WITH LIMITS OF PROPOSED WORK.
2. REMOVE EXISTING GRAVEL ROAD TO LIMITS INDICATED ON PLAN. COORDINATE WITH LIMITS OF PROPOSED WORK.
3. CLEAR AND GRUB EXISTING VEGETATION TO LIMITS INDICATED ON PLAN. COORDINATE WITH LIMITS OF PROPOSED WORK.
4. REMOVE EXISTING FENCE COMPLETELY. FILL RESULTING HOLES WITH EARTH COMPACTED IN 6" LIFTS UNTIL FLUSH WITH ADJACENT GRADE.
5. EXISTING CONSTRUCTION HAUL ROAD (CONSTRUCTED BY PHASE 3A CONTRACTOR) SHALL BE UTILIZED FOR EXCURSION TRAIL ALIGNMENT.
6. REMOVE EXISTING VEHICULAR GUARD RAIL TO LIMITS SHOW ON PLAN. COORDINATE WITH PROPOSED WORK.
7. REMOVE BARN OR FEATURE IN ITS ENTIRETY, INCLUDING STRUCTURE, FLOORS, FOUNDATIONS, ETC.
8. REMOVE FLOORS, SLABS AND FOUNDATION ONLY. REMOVAL AND SALVAGE BARN OR ABOVE-GROUND STRUCTURES AND STORE IN THE IMMEDIATE ADJACENT TOBACCO BARD.
9. COORDINATE THE REMOVAL OF EXISTING OVERHEAD ELECTRIC FACILITIES WITH ELECTRICAL SITE PLANS "UE" SERIES SHEETS.
10. EXISTING GRAVEL DRIVE TO REMAIN. CONTRACTOR SHALL UTILIZE EXISTING AS BASE FOR NEW LOUISVILLE LOOP – COORDINATE WITH NEW WORK "LT" SERIES SHEETS.
11. INSTALL TREE PROTECTION FENCING (REINFORCED SILT FENCE PER MSD EF-10-02). COORDINATE WITH TREE PRESERVATION NOTES, SHEET G0.12.
12. INSTALL ORANGE CONSTRUCTION FENCING AROUND ARCHEOLOGICAL / GLADECREST / WETLAND AREAS AS SHOWN ON PLAN PRIOR TO ANY WORK IN PROXIMITY.
13. IN LIEU OF A CONSTRUCTION FENCE, CONTRACTOR SHALL DEMARK LIMITS OF DISTURBANCE WITH PINK SURVEY RIBBON TIED TO FOLIAGE AT INTERVALS OFTEN ENOUGH TO ASCERTAIN LIMITS ALONG THE ALIGNMENT TO LIMITS INDICATED ON PLAN. CONTRACTOR SHALL LIMIT DISTURBANCE AND PRESENCE TO THE FORK-SIDE OF THE ALIGNMENT.
14. REMOVE EXISTING WATER LINE TO LIMITS INDICATED ON PLAN. COORDINATE WITH LAYOUT PLANS AND OR UTILITY SHEETS FOR NEW ALIGNMENT INFORMATION. CONTRACTOR SHALL COORDINATE WITH THE LOUISVILLE WATER COMPANY FOR ALL ASPECTS OF THIS WORK.
15. INSTALL TEMPORARY GRAVEL CONSTRUCTION ENTRANCE AT ACCESS POINTS WHERE SHOWN AND PER MSD STANDARD DRAWING ER-01-02. SEE GENERAL SWPPP NOTES, SHEET G0.13, GRADING PLANS AND MAINTENANCE OF TRAFFIC PLANS FOR ADDITIONAL EROSION CONTROL AND ACCESS INFORMATION.

Seals

STATE OF KENTUCKY
ROBERT D. MARTIN
15958
LICENSED
PROFESSIONAL ENGINEER
Robert D. Martin
5/8/13

0 100' 200'

Engineering
Planning

1046 East Chestnut Street, Louisville, Kentucky 40204
502.584.7200 • www.qkcorp.com
Kentucky • Indiana • Georgia • Tennessee • Florida

LANDSCAPE ARCHITECT
WRT
Wallace Roberts & Todd, LLC
1700 Market Street
28th Floor
Philadelphia, PA 19103
tel 215.732.5215
fax 215.732.2551

Architect
BRAVURA
111 West Washington Street
Louisville, Kentucky 40202
T: (502) 584-9900
F: (502) 584-0829

The Parklands of Floyds Fork, Project 4A

The Strand, Turkey Run Park and Broad Run

Louisville, Kentucky

Owner:
21st Century Parks, Inc.
371 W. Main St., Suite 202
Louisville, Kentucky 40202

REV #	DATE	DESCRIPTION
2	05-30-2013	Addendum #2: Sheet Reissued Whole

Job No:	12300.4AC
Date:	May 8, 2013
Scale:	1" = 100'
Drawn By:	

BID SET

Drawing Title:

Parklands of Floyds Fork

Cliffside Center PROJECT 4A Demolition and Tree Preservation

Drawing No:

CC-C2.3

May 31, 2013 - 2:09pm
C:\Users\Juliet.Pal-Ch1\Dropbox\Vercel\temp\MxPublish_5961\12300.4AC - 100 - DEMOLITION.dwg (CC - C2.3)

MATCH LINE – SEE SHEET CC-2.3

MATCH LINE – SEE SHEET CC-2.2

KEYNOTES (not all keynotes used this sheet)

1. SAWCUT AND REMOVE EXISTING ASPHALT PAVEMENT TO LIMITS INDICATED ON PLAN. COORDINATE WITH LIMITS OF PROPOSED WORK.
2. REMOVE EXISTING GRAVEL ROAD TO LIMITS INDICATED ON PLAN. COORDINATE WITH LIMITS OF PROPOSED WORK.
3. CLEAR AND GRUB EXISTING VEGETATION TO LIMITS INDICATED ON PLAN. COORDINATE WITH LIMITS OF PROPOSED WORK.
4. REMOVE EXISTING FENCE COMPLETELY. FILL RESULTING HOLES WITH EARTH COMPACTED IN 6" LIFTS UNTIL FLUSH WITH ADJACENT GRADE.
5. EXISTING CONSTRUCTION HAUL ROAD (CONSTRUCTED BY PHASE 3A CONTRACTOR) SHALL BE UTILIZED FOR EXCURSION TRAIL ALIGNMENT.
6. REMOVE EXISTING VEHICULAR GUARD RAIL TO LIMITS SHOW ON PLAN. COORDINATE WITH PROPOSED WORK.
7. REMOVE BARN OR FEATURE IN ITS ENTIRETY, INCLUDING STRUCTURE, FLOORS, FOUNDATIONS, ETC.
8. REMOVE FLOORS, SLABS AND FOUNDATION ONLY. REMOVAL AND SALVAGE BARN OR ABOVE-GROUND STRUCTURES AND STORE IN THE IMMEDIATE ADJACENT TOBACCO BARD.
9. COORDINATE THE REMOVAL OF EXISTING OVERHEAD ELECTRIC FACILITIES WITH ELECTRICAL SITE PLANS "UE" SERIES SHEETS.
10. EXISTING GRAVEL DRIVE TO REMAIN. CONTRACTOR SHALL UTILIZE EXISTING AS BASE FOR NEW LOUISVILLE LOOP – COORDINATE WITH NEW WORK "LT" SERIES SHEETS.
11. INSTALL TREE PROTECTION FENCING (REINFORCED SILT FENCE PER MSD EF-10-02). COORDINATE WITH TREE PRESERVATION NOTES, SHEET G0.12.
12. INSTALL ORANGE CONSTRUCTION FENCING AROUND ARCHEOLOGICAL / GLADECREST / WETLAND AREAS AS SHOWN ON PLAN PRIOR TO ANY WORK IN PROXIMITY.
13. IN LIEU OF A CONSTRUCTION FENCE, CONTRACTOR SHALL DEMARK LIMITS OF DISTURBANCE WITH PINK SURVEY RIBBON TIED TO FOLIAGE AT INTERVALS OFTEN ENOUGH TO ASCERTAIN LIMITS ALONG THE ALIGNMENT TO LIMITS INDICATED ON PLAN. CONTRACTOR SHALL LIMIT DISTURBANCE AND PRESENCE TO THE FORK-SIDE OF THE ALIGNMENT.
14. REMOVE EXISTING WATER LINE TO LIMITS INDICATED ON PLAN. COORDINATE WITH LAYOUT PLANS AND OR UTILITY SHEETS FOR NEW ALIGNMENT INFORMATION. CONTRACTOR SHALL COORDINATE WITH THE LOUISVILLE WATER COMPANY FOR ALL ASPECTS OF THIS WORK.
15. INSTALL TEMPORARY GRAVEL CONSTRUCTION ENTRANCE AT ACCESS POINTS WHERE SHOWN AND PER MSD STANDARD DRAWING ER-01-02. SEE GENERAL SWPPP NOTES, SHEET G0.13, GRADING PLANS AND MAINTENANCE OF TRAFFIC PLANS FOR ADDITIONAL EROSION CONTROL AND ACCESS INFORMATION.

Seals

STATE OF KENTUCKY
ROBERT D. MARTIN
15958
LICENSED
PROFESSIONAL ENGINEER
5/8/13

Gladecress

Shep Pond

Ced Syc

Fire

Hapa Ho E

Rifle Poo

Fire Scar

Gladecress

FLOYDS FORK CREEK

MATCH LINE – SEE SHEET CC-2.1

MATCH LINE – SEE SHEET CC-2.2

0 100' 200'

Engineering
Planning

1046 East Chestnut Street, Louisville, Kentucky 40204
502.584.6300 www.mindel.com
Kentucky • Indiana • Georgia • Tennessee • Florida

LANDSCAPE ARCHITECT

WRT

Wallace Roberts & Todd, LLC

1700 Market Street
28th Floor
Philadelphia, PA 19103

tel 215.732.5215
fax 215.732.2551

Architect

BRAVURA

111 West Washington Street
Louisville, Kentucky 40202
T: (502) 584-9900
F: (502) 584-0829

The Parklands of Floyds Fork, Project 4A

The Strand, Turkey Run Park and Broad Run
Louisville, Kentucky

Owner:
21st Century Parks, Inc.
371 W. Main St., Suite 202
Louisville, Kentucky 40202

REV #	DATE	DESCRIPTION
2	05-30-2013	Addendum #2: Sheet Reissued Whole

Job No:	12300.4AC
Date:	May 8, 2013
Scale:	1" = 100'
Drawn By:	

BID SET

Drawing Title:

Parklands of Floyds Fork

Cliffside Center
PROJECT 4A
Demolition and Tree Preservation

Drawing No:

CC-C2.2

May, 31, 2013 – 2:09pm
C:\Users\User-PA-NT\Vaporstock\Acrs\Users\AnPolish_SAK\123004AC-100-DEMOLITION.dwg (CC-C2.2)

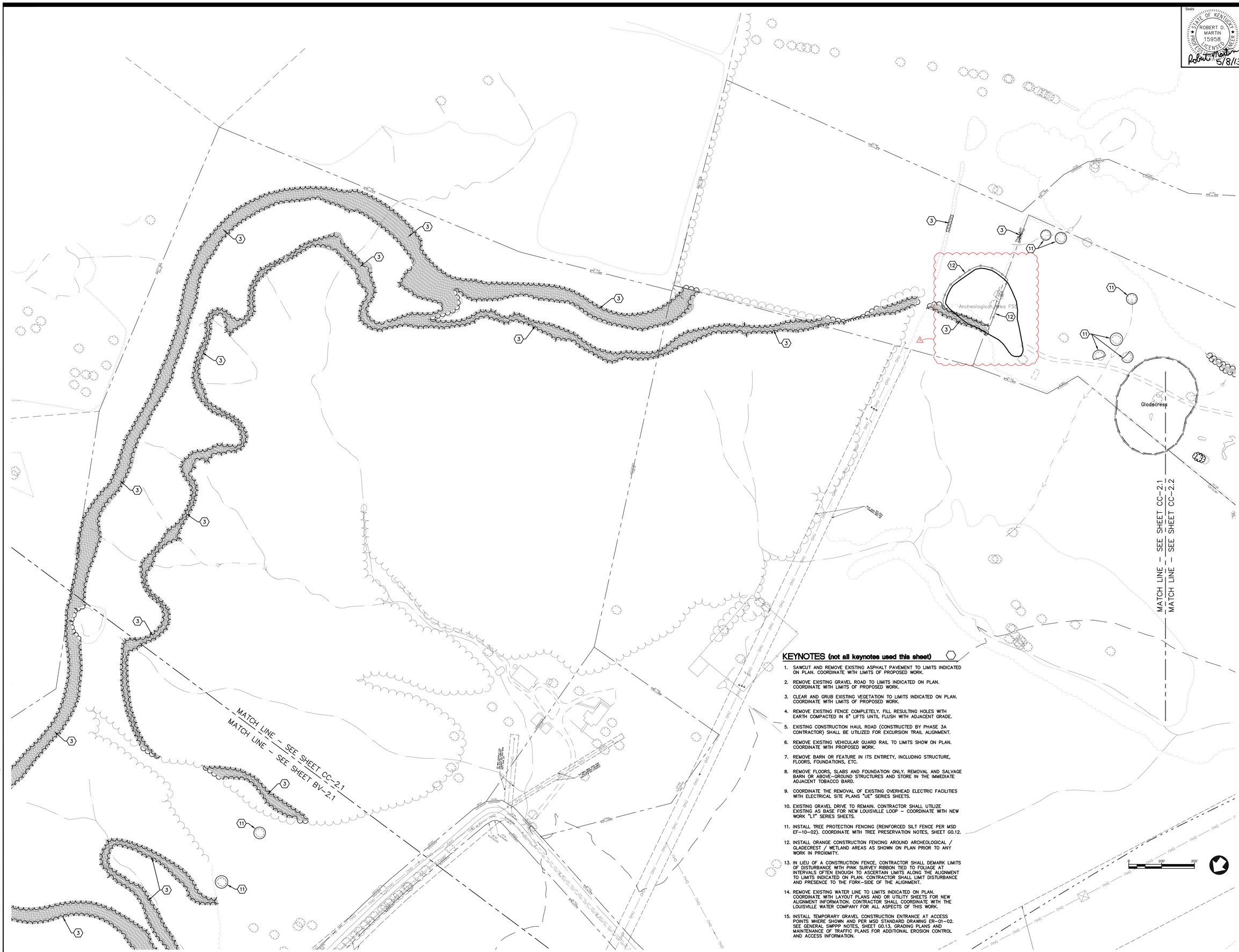

KEYNOTES (not all keynotes used this sheet)

1. SAWCUT AND REMOVE EXISTING ASPHALT PAVEMENT TO LIMITS INDICATED ON PLAN. COORDINATE WITH LIMITS OF PROPOSED WORK.
2. REMOVE EXISTING GRAVEL ROAD TO LIMITS INDICATED ON PLAN. COORDINATE WITH LIMITS OF PROPOSED WORK.
3. CLEAR AND GRUB EXISTING VEGETATION TO LIMITS INDICATED ON PLAN. COORDINATE WITH LIMITS OF PROPOSED WORK.
4. REMOVE EXISTING FENCE COMPLETELY. FILL RESULTING HOLES WITH EARTH COMPACTED IN 6" LIFTS UNTIL FLUSH WITH ADJACENT GRADE.
5. EXISTING CONSTRUCTION HAUL ROAD (CONSTRUCTED BY PHASE 3A CONTRACTOR) SHALL BE UTILIZED FOR EXCURSION TRAIL ALIGNMENT.
6. REMOVE EXISTING VEHICULAR GUARD RAIL TO LIMITS SHOW ON PLAN. COORDINATE WITH PROPOSED WORK.
7. REMOVE BARN OR FEATURE IN ITS ENTIRETY, INCLUDING STRUCTURE, FLOORS, FOUNDATIONS, ETC.
8. REMOVE FLOORS, SLABS AND FOUNDATION ONLY. REMOVAL AND SALVAGE BARN OR ABOVE-GROUND STRUCTURES AND STORE IN THE IMMEDIATE ADJACENT TOBACCO BARD.
9. COORDINATE THE REMOVAL OF EXISTING OVERHEAD ELECTRIC FACILITIES WITH ELECTRICAL SITE PLANS "UE" SERIES SHEETS.
10. EXISTING GRAVEL DRIVE TO REMAIN. CONTRACTOR SHALL UTILIZE EXISTING AS BASE FOR NEW LOUISVILLE LOOP – COORDINATE WITH NEW WORK "LT" SERIES SHEETS.
11. INSTALL TREE PROTECTION FENCING (REINFORCED SILT FENCE PER MSD EF-10-02). COORDINATE WITH TREE PRESERVATION NOTES, SHEET G0.12.
12. INSTALL ORANGE CONSTRUCTION FENCING AROUND ARCHEOLOGICAL / GLADECREST / WETLAND AREAS AS SHOWN ON PLAN PRIOR TO ANY WORK IN PROXIMITY.
13. IN LIEU OF A CONSTRUCTION FENCE, CONTRACTOR SHALL DEMARK LIMITS OF DISTURBANCE WITH PINK SURVEY RIBBON TIED TO FOLIAGE AT INTERVALS OFTEN ENOUGH TO ASCERTAIN LIMITS ALONG THE ALIGNMENT TO LIMITS INDICATED ON PLAN. CONTRACTOR SHALL LIMIT DISTURBANCE AND PRESENCE TO THE FORK-SIDE OF THE ALIGNMENT.
14. REMOVE EXISTING WATER LINE TO LIMITS INDICATED ON PLAN. COORDINATE WITH LAYOUT PLANS AND OR UTILITY SHEETS FOR NEW ALIGNMENT INFORMATION. CONTRACTOR SHALL COORDINATE WITH THE LOUISVILLE WATER COMPANY FOR ALL ASPECTS OF THIS WORK.
15. INSTALL TEMPORARY GRAVEL CONSTRUCTION ENTRANCE AT ACCESS POINTS WHERE SHOWN AND PER MSD STANDARD DRAWING ER-01-02. SEE GENERAL SWPPP NOTES, SHEET G0.13, GRADING PLANS AND MAINTENANCE OF TRAFFIC PLANS FOR ADDITIONAL EROSION CONTROL AND ACCESS INFORMATION.

Seals

STATE OF KENTUCKY
ROBERT D. MARTIN
15958
LICENSED
PROFESSIONAL ENGINEER
5/8/13

Engineering
Planning

1046 East Chestnut Street Louisville, Kentucky 40204
Phone: 502.584.7222 Internet: www.l-a.com
Kentucky • Indiana • Georgia • Tennessee • Florida

LANDSCAPE ARCHITECT
WRT

Wallace Roberts & Todd, LLC
1700 Market Street
28th Floor
Philadelphia, PA 19103
tel 215.732.5215
fax 215.732.2551

Architect
BRAVURA
111 West Washington Street
Louisville, Kentucky 40202
T: (502) 584-9900
F: (502) 584-0829

The Parklands of Floyds Fork, Project 4A

The Strand, Turkey Run Park and Broad Run
Louisville, Kentucky

Owner:
21st Century Parks, Inc.
371 W. Main St., Suite 202
Louisville, Kentucky 40202

REV #	DATE	DESCRIPTION
2	05-30-2013	Addendum#2: Sheet Reissued Whole
1	05-23-2013	Addendum #1: Archaeological Area Fencing Adjustment

Job No:	12300.4AC
Date:	May 8, 2013
Scale:	1" = 100'
Drawn By:	

BID SET

Drawing Title:

Parklands of Floyds Fork

Cliffside Center
PROJECT 4A
Demolition and Tree Preservation

Drawing No:

CC-C2.1

May 31, 2013 - 2:09pm
C:\Users\Keller.Parish\Documents\Revit Central\Archive_6961\12300AAC-100-DEMOLITION.rvt (CC-C2.1)



FLOODPLAIN COMPENSATION CONSTRUCTION NOTE:

FINAL GRADED AREA REQUIRES 6" OF TOPSOIL PRIOR TO RESEEDING; STOCKPILE TOPSOIL ON SITE IN QUANTITIES SUFFICIENT TO SUPPORT RESEEDING REQUIREMENT.

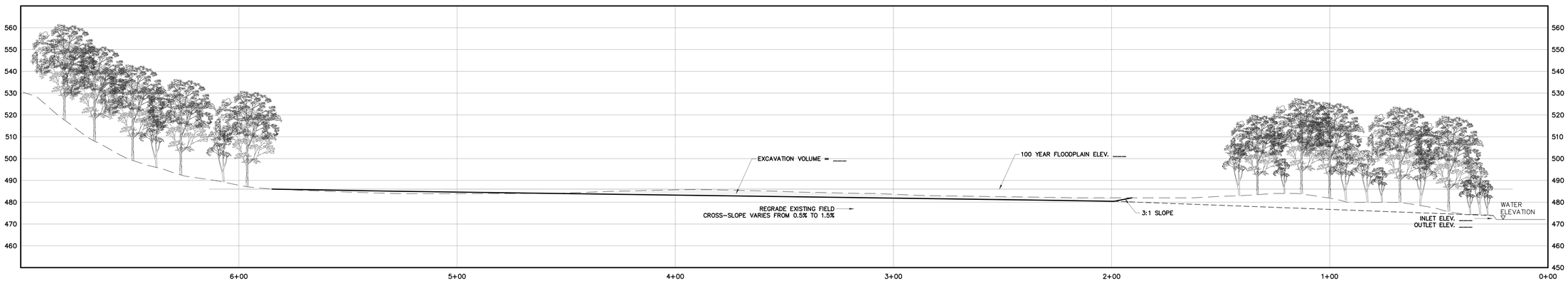

FLOODPLAIN COMPENSATION BASIN PROFILE 1"=20'

Seals

STATE OF KENTUCKY
ROBERT D. MARTIN
15958
LICENSED
PROFESSIONAL ENGINEER

Robert Martin 5/8/13

Engineering
Planning

1046 East Chestnut Street, Louisville, Kentucky 40204
Phone: 502-585-2222 Internet: www.qk4.com
Kentucky • Indiana • Georgia • Tennessee • Florida

LANDSCAPE ARCHITECT

Wallace Roberts & Todd, LLC
1700 Market Street
28th Floor
Philadelphia, PA 19103
tel 215.732.5215
fax 215.732.2551

Architect

BRAVURA
111 West Washington Street
Louisville, Kentucky 40202
T: (502) 584-9900
F: (502) 584-0829

The Parklands of Floyds Fork, Project 4A

The Strand, Turkey Run Park and Broad Run
Louisville, Kentucky

Owner:
21st Century Parks, Inc.
371 W. Main St., Suite 202
Louisville, Kentucky 40202

REV #	DATE	DESCRIPTION
2	05-30-2013	Addendum#2: Added Floodplain Compensation Construction Note

Job No:	12300.4AC
Date:	May 8, 2013
Scale:	1" = 40'
Drawn By:	

BID SET

Drawing Title:

Parklands of Floyds Fork

Big Vista Valley PROJECT 4A Flood Plain Compensation

Drawing No:

BV-C7.9

May 30, 2013 - 8:45am
C:\Users\fuller.PAI-NT\appdata\local\temp\AcPublish_4892\12300.4AC-FLOODPLAIN COMPENSATION.dwg (BV-C7.9)

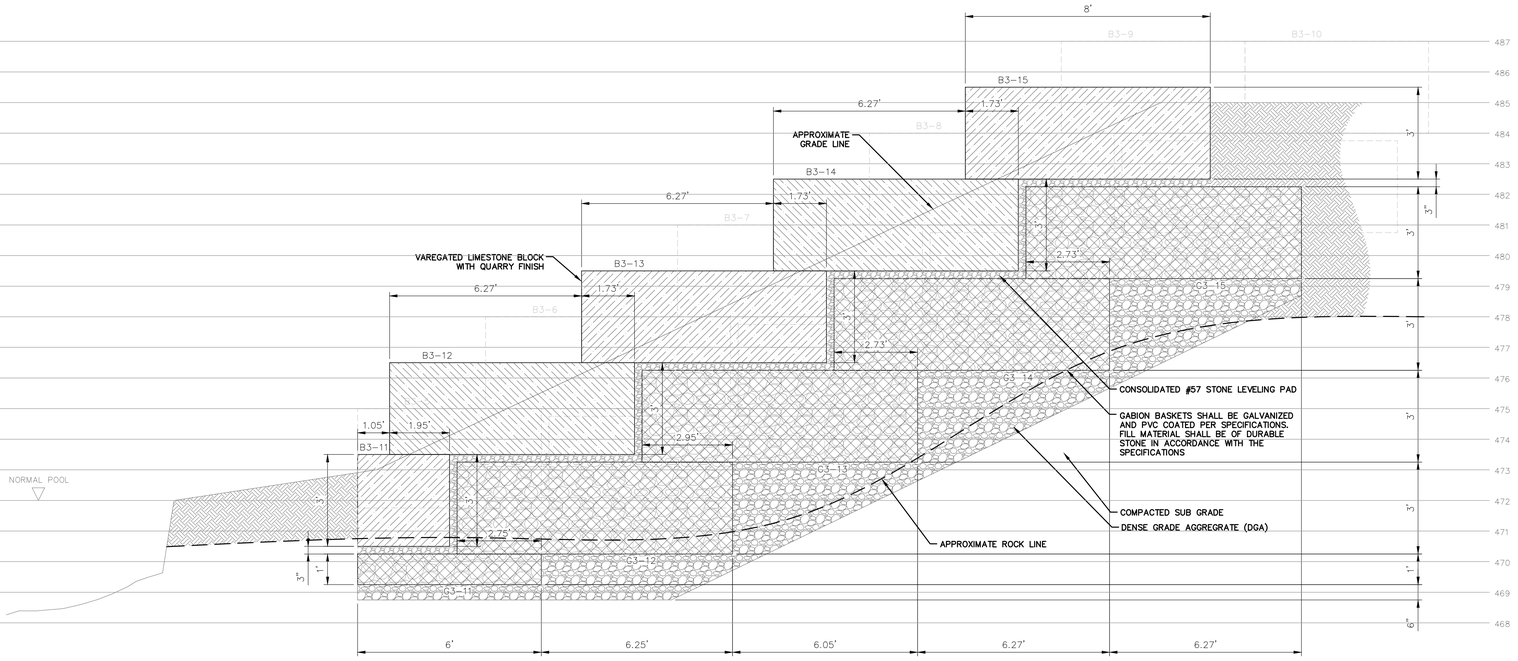

LIMESTONE BLOCKS AND GABIONS - NORTH SIDE, NORTH ROW

SECTION C

SCALE: NONE

BV-C7.1 BV-C7.4

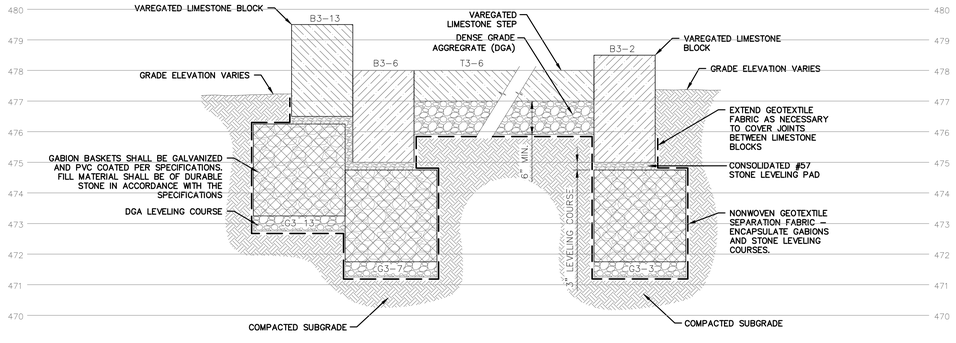

LIMESTONE STEPS, BLOCKS AND GABIONS

SECTION D

SCALE: NONE

BV-C7.1 BV-C7.4

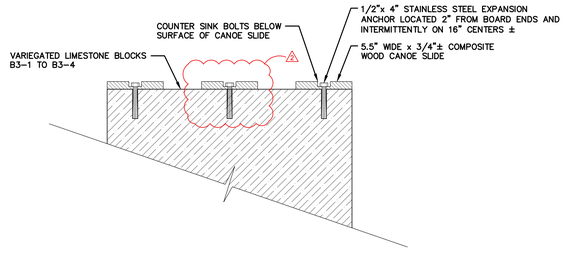

CANOE SLIDE DETAIL 1

SCALE: NONE

BV-C6.5

Seals

STATE OF KENTUCKY ROBERT D. MARTIN 15958 LICENSED PROFESSIONAL ENGINEER

Robert D. Martin 5/8/13

Engineering
Planning

1046 East Chestnut Street, Louisville, Kentucky 40204
Phone: 502-585-2222 Internet: gk4.com
Kentucky • Indiana • Georgia • Tennessee • Florida

LANDSCAPE ARCHITECT
WRT
Wallace Roberts & Todd, LLC
1700 Market Street
28th Floor
Philadelphia, PA 19103
tel 215.732.5215
fax 215.732.2551

Architect
BRAVURA
111 West Washington Street
Louisville, Kentucky 40202
T: (502) 584-9900
F: (502) 584-0829

The Parklands of Floyds Fork, Project 4A

The Strand, Turkey Run Park and Broad Run

Louisville, Kentucky

Owner:
21st Century Parks, Inc.
371 W. Main St., Suite 202
Louisville, Kentucky 40202

REV #	DATE	DESCRIPTION
2	05-30-2013	Addendum#2: Revised canoe slide detail

Job No:	12300.4AC
Date:	May 8, 2013
Scale:	1" = 2'
Drawn By:	

BID SET

Drawing Title:

Parklands of Floyds Fork

Big Vista Valley PROJECT 4A Canoe Launch Sections

Drawing No:

BV-C6.5

May 30, 2013 – 11:10am
C:\Users\holt\appdata\local\temp\AcPublish_5944\123004AC-002-SITE.dwg (BV-C6.5)

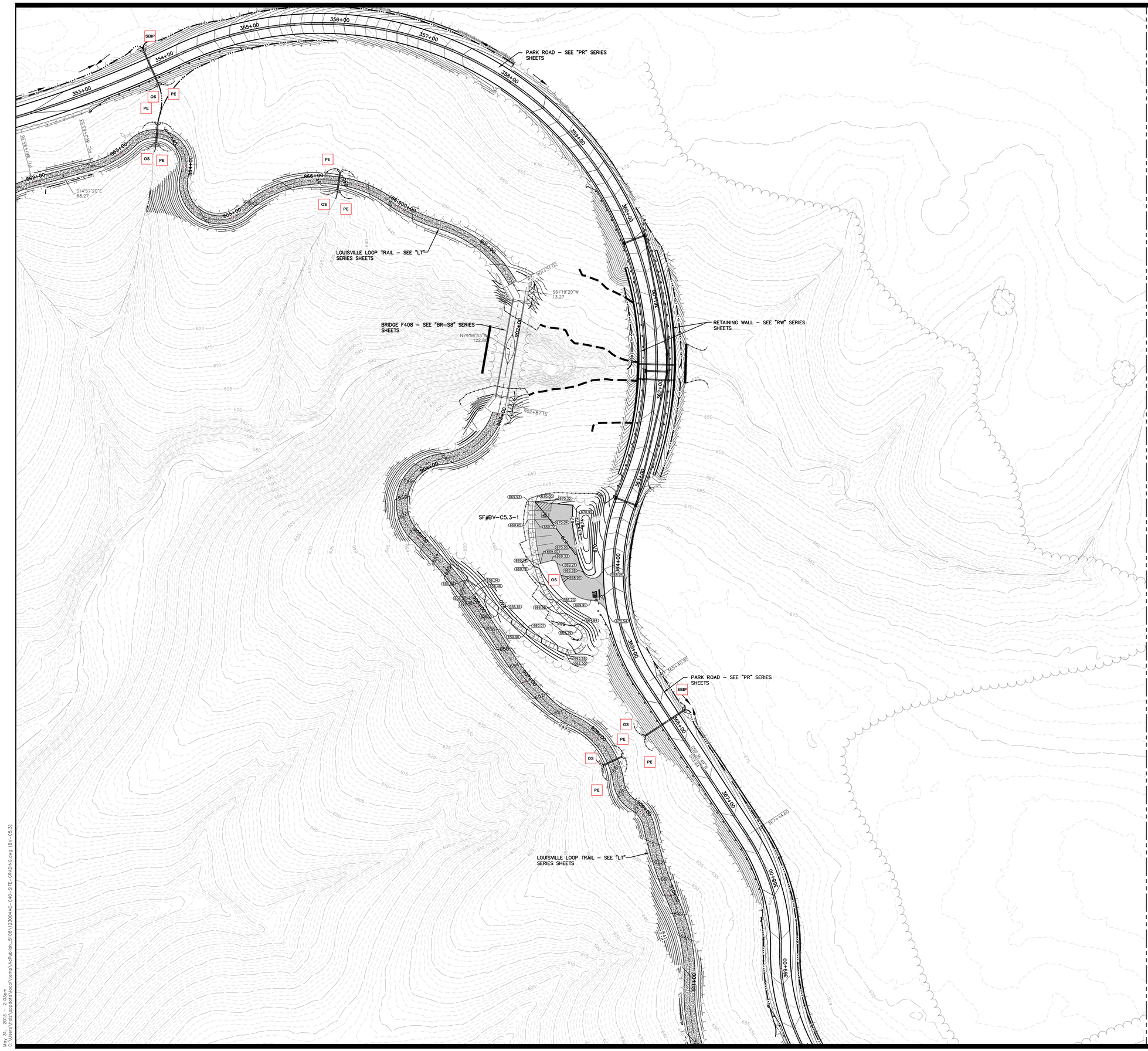

Seals

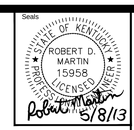

KEYNOTES (not all keynotes used this sheet)

1. CONSTRUCT CONTOURED–BOTTOM SOD SWALE WHERE INDICATED ON PLAN AND PER DETAIL 1, SHEET C9.2.
2. CONTRACTOR SHALL INSTALL COFFERDAM AS NECESSARY TO FACILITATE CANOE LAUNCH CONSTRUCTION. COORDINATE WITH GENERAL SWPPP NOTES, SHEET G0.12. CONTRACTOR SHALL WORK WITH THE MSD INSPECTOR AND DEVISE A COFFER DAM SYSTEM AND IMPLEMENTATION PLAN AND SUBMIT TO OWNER'S ENGINEER FOR REVIEW IN THE FORM OF A SHOP DRAWING SUBMITTAL PRIOR TO ANY CONSTRUCTION.
3. INSTALL SILO CENTER BASIN WHERE INDICATED ON PLAN AND PER DETAIL 14, SHEET C9.1. COORDINATE WITH PIPE AND STRUCTURE SUMMARY SHEETS.
4. MOWN LAWN TRAIL – GRADE THE SILO CENTER MOUND TO CREATE A BENCH TO ACCOMMODATE THE MOWN LAWN TRAIL AS INDICATED ON PLAN. SEED AREA WITH MOWN LAWN MIX. SEED ALL REMAINING AREAS OF THE SILO CENTER MOUND WITH WILDFLOWER MEADOW MIX – DRY.
5. PORCH LAWN – GRADE AREA AS INDICATED ON PLAN. SEED WITH MOWN LAWN MIX.
6. INSTALL 20'(long) x 4'(wide) SCOUR STOP AT END OF FLUME / CURB DEPRESSION WHERE INDICATED ON PLAN AND PER DETAIL 2, SHEET C9.2.

GENERAL NOTES

A. SEE C3 SERIES SHEETS FOR ALL PIPE AND STRUCTURE INFORMATION.

B. COORDINATE WITH GENERAL SWPPP NOTES FOR LINEAR CONSTRUCTION ON SHEET G0.12 FOR EROSION CONTROL MEASURES PERTAINING TO PARK ROAD, LOUISVILLE LOOP AND EXCURSION TRAIL CONSTRUCTION.

C. SEE PR–SERIES PLANS FOR ALL ROADSIDE DITCH INFORMATION.

D. SEE LT–SERIES PLANS FOR ALL TRAILSIDE DITCH INFORMATION.

E. SEE G0.12 FOR SEEDING MIXTURES AND AREAS OF APPLICATION.

SWPPP PHASING

A. PERFORM SITE CLEARING OPERATIONS AS REQUIRED TO FACILITATE CONSTRUCTION.

B. INSTALL SILT FENCE SF#BV–C5.3–1

C. BRING PARKING AREA UP TO ROUGH GRADE.

D. ROCK PARKING AREA.

E. FINAL GRADE AND STABILIZE DISTURBED AREAS WITH APPROPRIATE SEED MIX.

F. INSTALL CONCRETE SIDEWALK AND CONCRETE CURBS.

G. INSTALL ASPHALT PAVEMENT.

H. CLEAN EVERY TWO WEEKS AND AFTER EACH RAINFALL EVENT OF 0.5" OR GREATER.

I. REMOVE ALL BMPs AFTER SITE IS STABILIZED.

J. NOT ALL BMP"s DEPICTED ON THIS SHEET ARE INCLUDED IN THE SWPPP PHASING NOTES ABOVE. COORDINATE WITH "PR" SERIES SHEETS AND "LT" SERIES SHEETS FOR ADDITIONAL BMP's AND SWPPP PHASING NOTES.

2

BMP LEGEND

- SBIP — STONE BAG INLET PROTECTION EF–03/05/06–02
- TGCE — TEMPORARY GRAVEL CONST. ENTRANCE/EXIT ER–01–02
- OS — SCOUR STOP PAD OUTLET STABILIZATION
- PE — PIPE INLET PROTECTION PER DETAIL 1, SHEET G0.13.
- SF#X — REINFORCED SILT FENCE EF–10–02
- DC#X — ROCK DITCH CHECK EB–03–01
- TEMPORARY COFFER DAM
- PUMP AROUND FLOW DIVERSION ED–01–01

0 40' 80'

Engineering
Planning
1046 East Chestnut Street Louisville, Kentucky 40204
Phone: (502) 584-7292 Fax: (502) 584-7220
Kentucky • Indiana • Georgia • Tennessee • Florida

LANDSCAPE ARCHITECT
WRT
Wallace Roberts & Todd, LLC
1700 Market Street
28th Floor
Philadelphia, PA 19103
tel 215.732.5215
fax 215.732.2551

Architect
BRAVURA
111 West Washington Street
Louisville, Kentucky 40202
T: (502) 584-9900
F: (502) 584-0829

The Parklands of Floyds Fork, Project 4A

The Strand, Turkey Run Park and Broad Run
Louisville, Kentucky

Owner:
21st Century Parks, Inc.
371 W. Main St. Suite 202
Louisville, Kentucky 40202

REV #	DATE	DESCRIPTION
2	05-30-2013	Addendum#2: MSD comments

Job No: 12300.4AC
Date: May 8, 2013
Scale: 1" = 40'
Drawn By:
BID SET

Drawing Title:
Parklands of Floyds Fork
Big Vista Valley PROJECT 4A Parking Lot Grading, Drainage and SWPPP

Drawing No:
BV-C5.3

May 31, 2013 – 2:05pm
C:\Users\Vlad\Updated\Vlad\temp\AcPublish_5168\12300.4AC-040-SITE_GRADING.dwg (BV-C5.3)

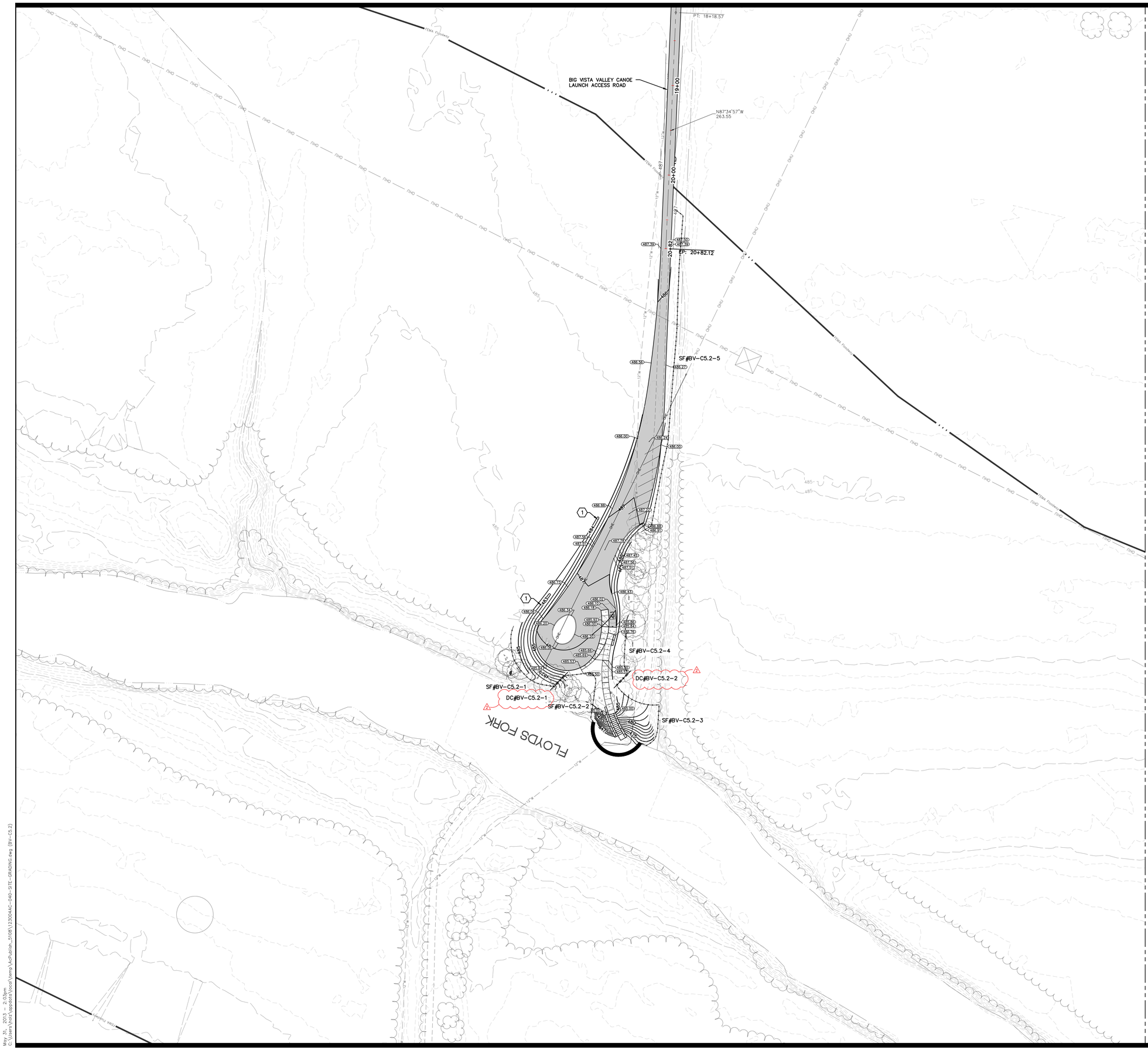

KEYNOTES (not all keynotes used this sheet)

1. CONSTRUCT CONTOURED-BOTTOM SOD SWALE WHERE INDICATED ON PLAN AND PER DETAIL 1, SHEET C9.2.
2. CONTRACTOR SHALL INSTALL COFFERDAM AS NECESSARY TO FACILITATE CANOE LAUNCH CONSTRUCTION. COORDINATE WITH GENERAL SWPPP NOTES, SHEET G0.12. CONTRACTOR SHALL WORK WITH THE MSD INSPECTOR AND DEVISE A COFFER DAM SYSTEM AND IMPLEMENTATION PLAN AND SUBMIT TO OWNER'S ENGINEER FOR REVIEW IN THE FORM OF A SHOP DRAWING SUBMITTAL PRIOR TO ANY CONSTRUCTION.
3. INSTALL SILO CENTER BASIN WHERE INDICATED ON PLAN AND PER DETAIL 14, SHEET C9.1. COORDINATE WITH PIPE AND STRUCTURE SUMMARY SHEETS.
4. MOWN LAWN TRAIL – GRADE THE SILO CENTER MOUND TO CREATE A BENCH TO ACCOMMODATE THE MOWN LAWN TRAIL AS INDICATED ON PLAN. SEED AREA WITH MOWN LAWN MIX. SEED ALL REMAINING AREAS OF THE SILO CENTER MOUND WITH WILDFLOWER MEADOW MIX – DRY.
5. PORCH LAWN – GRADE AREA AS INDICATED ON PLAN. SEED WITH MOWN LAWN MIX.
6. INSTALL 20'(long) x 4'(wide) SCOUR STOP AT END OF FLUME / CURB DEPRESSION WHERE INDICATED ON PLAN AND PER DETAIL 2, SHEET C9.2.

GENERAL NOTES

A. SEE C3 SERIES SHEETS FOR ALL PIPE AND STRUCTURE INFORMATION.
B. COORDINATE WITH GENERAL SWPPP NOTES FOR LINEAR CONSTRUCTION ON SHEET G0.12 FOR EROSION CONTROL MEASURES PERTAINING TO PARK ROAD, LOUISVILLE LOOP AND EXCURSION TRAIL CONSTRUCTION.
C. SEE PR-SERIES PLANS FOR ALL ROADSIDE DITCH INFORMATION.
D. SEE LT-SERIES PLANS FOR ALL TRAILSIDE DITCH INFORMATION.
E. SEE G0.12 FOR SEEDING MIXTURES AND AREAS OF APPLICATION.

SWPPP PHASING

A. PERFORM SITE CLEARING OPERATIONS AS REQUIRED TO FACILITATE CONSTRUCTION.
B. INSTALL SILT FENCE SF#BV-C5.2-1 THROUGH SF#BV-C5.2-5.
C. INSTALL ROCK DITCH CHECK, DC#BV-C5.1-1 AND DC#BV-C5.1-2.
D. GRADE DITCH ADJACENT TO CANOE LAUNCH AND INSTALL DITCH CHECK.
E. BRING CANOE LAUNCH DRIVE WAY AND PARKING AREA UP TO ROUGH GRADE.
F. ROCK DRIVE WAY AND PARKING AREA.
G. INSTALL COFFERDAM (IF NECESSARY DEPENDING UPON WATER LEVEL OF FLOYDS FORK AND ANTICIPATED WEATHER AND CONSTRUCTION DURATION.
H. CONSTRUCT CANOE LAUNCH WORKING FROM FLOYDS FORK INLAND.
I. ESTABLISH FINAL GRADE SURROUNDING CANOE LAUNCH.
J. STABILIZE DISTURBED AREA IMMEDIATELY SURROUNDING CANOE LAUNCH AND / OR INSTALL BIO ENGINEERING MEASURES SURROUNDING CANOE LAUNCH.
K. INSTALL CONCRETE SIDEWALK AND CONCRETE CURBS.
L. FINAL GRADE AND STABILIZE DISTURBED AREAS WITH APPROPRIATE SEED MIX.
M. INSTALL ASPHALT PAVEMENT.
N. CLEAN EVERY TWO WEEKS AND AFTER EACH RAINFALL EVENT OF 0.5" OR GREATER.
O. REMOVE ALL BMPs AFTER SITE IS STABILIZED.

BMP LEGEND

- SBIP — STONE BAG INLET PROTECTION EF-03/05/06-02
- TGCE — TEMPORARY GRAVEL CONST. ENTRANCE/EXIT ER-01-02
- OS — SCOUR STOP PAD OUTLET STABILIZATION
- PE — PIPE INLET PROTECTION PER DETAIL 1, SHEET G0.13.
- SF#X — REINFORCED SILT FENCE EF-10-02
- DC#X — ROCK DITCH CHECK EB-03-01
- TEMPORARY COFFER DAM
- PUMP AROUND FLOW DIVERSION ED-01-01

0 40' 80'

Seals

STATE OF KENTUCKY — ROBERT D. MARTIN 15958 LICENSED PROFESSIONAL ENGINEER
5/8/13

Engineering
Planning
QK
1046 East Chestnut Street, Louisville, Kentucky 40204
Phone: (502) 584-7200 Fax: (502) 584-7555
Kentucky • Indiana • Georgia • Tennessee • Florida

LANDSCAPE ARCHITECT
WRT
Wallace Roberts & Todd, LLC
1700 Market Street
28th Floor
Philadelphia, PA 19103
tel 215.732.5215
fax 215.732.2551

Architect
BRAVURA
111 West Washington Street
Louisville, Kentucky 40202
T: (502) 584-9900
F: (502) 584-0829

The Parklands of Floyds Fork, Project 4A
The Strand, Turkey Run Park and Broad Run
Louisville, Kentucky

Owner:
21st Century Parks, Inc.
371 W. Main St., Suite 202
Louisville, Kentucky 40202

REV #	DATE	DESCRIPTION
2	05-30-2013	Addendum#2: MS3 comments

Job No: 12300.4AC
Date: May 8, 2013
Scale: 1" = 40'
Drawn By:

BID SET

Drawing Title:
Parklands of Floyds Fork
Big Vista Valley PROJECT 4A Canoe Launch Grading, Drainage and SWPPP

Drawing No:
BV-C5.2

May 31, 2013 - 2:03pm
C:\Users\Vmd\Appdata\Local\Temp\AcPublish_5108\12300AC-04b-SITE-GRADING.dwg (BV-C5.2)

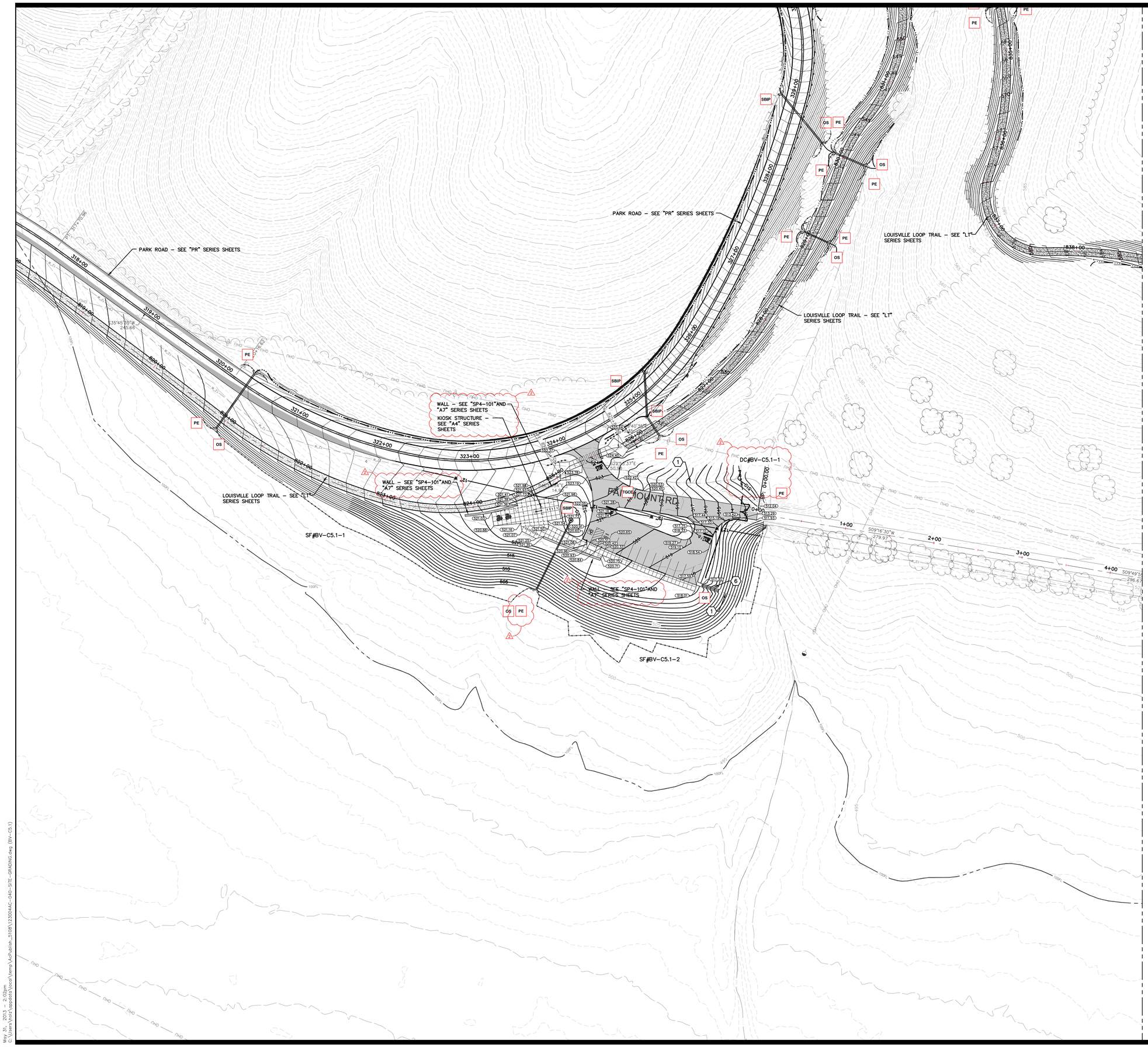

KEYNOTES (not all keynotes used this sheet)

1. CONSTRUCT CONTOURED–BOTTOM SOD SWALE WHERE INDICATED ON PLAN AND PER DETAIL 1, SHEET C9.2.
2. CONTRACTOR SHALL INSTALL COFFERDAM AS NECESSARY TO FACILITATE CANOE LAUNCH CONSTRUCTION. COORDINATE WITH GENERAL SWPPP NOTES, SHEET G0.12. CONTRACTOR SHALL WORK WITH THE MSD INSPECTOR AND DEVISE A COFFER DAM SYSTEM AND IMPLEMENTATION PLAN AND SUBMIT TO OWNER'S ENGINEER FOR REVIEW IN THE FORM OF A SHOP DRAWING SUBMITTAL PRIOR TO ANY CONSTRUCTION.
3. INSTALL SILO CENTER BASIN WHERE INDICATED ON PLAN AND PER DETAIL 14, SHEET C9.1. COORDINATE WITH PIPE AND STRUCTURE SUMMARY SHEETS.
4. MOWN LAWN TRAIL – GRADE THE SILO CENTER MOUND TO CREATE A BENCH TO ACCOMMODATE THE MOWN LAWN TRAIL AS INDICATED ON PLAN. SEED AREA WITH MOWN LAWN MIX. SEED ALL REMAINING AREAS OF THE SILO CENTER MOUND WITH WILDFLOWER MEADOW MIX – DRY.
5. PORCH LAWN – GRADE AREA AS INDICATED ON PLAN. SEED WITH MOWN LAWN MIX.
6. INSTALL 20'(long) x 4'(wide) SCOUR STOP AT END OF FLUME / CURB DEPRESSION WHERE INDICATED ON PLAN AND PER DETAIL 2, SHEET C9.2.

GENERAL NOTES

A. SEE C3 SERIES SHEETS FOR ALL PIPE AND STRUCTURE INFORMATION.

B. COORDINATE WITH GENERAL SWPPP NOTES FOR LINEAR CONSTRUCTION ON SHEET G0.12 FOR EROSION CONTROL MEASURES PERTAINING TO PARK ROAD, LOUISVILLE LOOP AND EXCURSION TRAIL CONSTRUCTION.

C. SEE PR–SERIES PLANS FOR ALL ROADSIDE DITCH INFORMATION.

D. SEE LT–SERIES PLANS FOR ALL TRAILSIDE DITCH INFORMATION.

E. SEE G0.12 FOR SEEDING MIXTURES AND AREAS OF APPLICATION.

SWPPP PHASING

A. PERFORM SITE CLEARING OPERATIONS AS REQUIRED TO FACILITATE CONSTRUCTION.

B. INSTALL SILT FENCE SF#BV–C5.1–1 AND SH#BV–C5.1–2.

C. BRING TRAIL HEAD AREA UP TO ROUGH GRADE.

D. INSTALL ROCK DITCH CHECK DC#BV–C5.1–1.

E. INSTALL STORM CULVERT PIPES.

F. INSTALL STONE BAG INLET PROTECTION.

G. ROCK PARKING AREA.

H. FINAL GRADE AND STABILIZE DISTURBED AREAS WITH APPROPRIATE SEED MIX.

I. INSTALL CONCRETE SIDEWALK AND CONCRETE CURBS.

J. CONSTRUCT TRAILHEAD/KIOSK STRUCTURE.

K. INSTALL ASPHALT PAVEMENT.

L. CLEAN EVERY TWO WEEKS AND AFTER EACH RAINFALL EVENT OF 0.5" OR GREATER.

M. REMOVE ALL BMPs AFTER SITE IS STABILIZED.

N. NOT ALL BMP's DEPICTED ON THIS SHEET ARE INCLUDED IN THE SWPPP PHASING NOTES ABOVE. COORDINATE WITH "PR" SERIES SHEETS AND "LT" SERIES SHEETS FOR ADDITIONAL BMP's AND SWPPP PHASING NOTES

BMP LEGEND

- SBIP — STONE BAG INLET PROTECTION EF–03/05/06–02
- TGCE — TEMPORARY GRAVEL CONST. ENTRANCE/EXIT ER–01–02
- OS — SCOUR STOP PAD OUTLET STABILIZATION
- PE — PIPE INLET PROTECTION PER DETAIL 1, SHEET G0.13.
- SF#X — REINFORCED SILT FENCE EF–10–02
- DC#X — ROCK DITCH CHECK EB–03–01
- TEMPORARY COFFER DAM
- PUMP AROUND FLOW DIVERSION ED–01–01

0 40' 80'

Seals

STATE OF KENTUCKY — ROBERT D. MARTIN — 15958 — LICENSED PROFESSIONAL ENGINEER
Robert D. Martin 5/8/13

Engineering
Planning
1046 East Chestnut Street, Louisville, Kentucky 40204
T: (502) 584-9900 F: (502) 584-0829
Kentucky • Indiana • Georgia • Tennessee • Florida

LANDSCAPE ARCHITECT
Wallace Roberts & Todd, LLC
1700 Market Street
28th Floor
Philadelphia, PA 19103
tel 215.732.5215
fax 215.732.2551

Architect
BRAVURA
111 West Washington Street
Louisville, Kentucky 40202
T: (502) 584-9900
F: (502) 584-0829

The Parklands of Floyds Fork, Project 4A

The Strand, Turkey Run Park and Broad Run

Louisville, Kentucky

Owner:
21st Century Parks, Inc.
371 W. Main St., Suite 202
Louisville, Kentucky 40202

REV #	DATE	DESCRIPTION
2	05-30-2013	Addendum#2: Revised wall references, MSD comments

Job No: 12300.4AC
Date: May 8, 2013
Scale: 1" = 40'
Drawn By:

BID SET

Drawing Title:

Parklands of Floyds Fork

Big Vista Valley PROJECT 4A Trail Head Grading, Drainage and SWPPP

Drawing No:

BV-C5.1

May 31, 2013 – 2:02pm
C:\Users\rhoyt.capsotis\Local\Temp\AcPublish_5168\12300AC–040–SITE–GRADING.dwg (BV–C5.1)

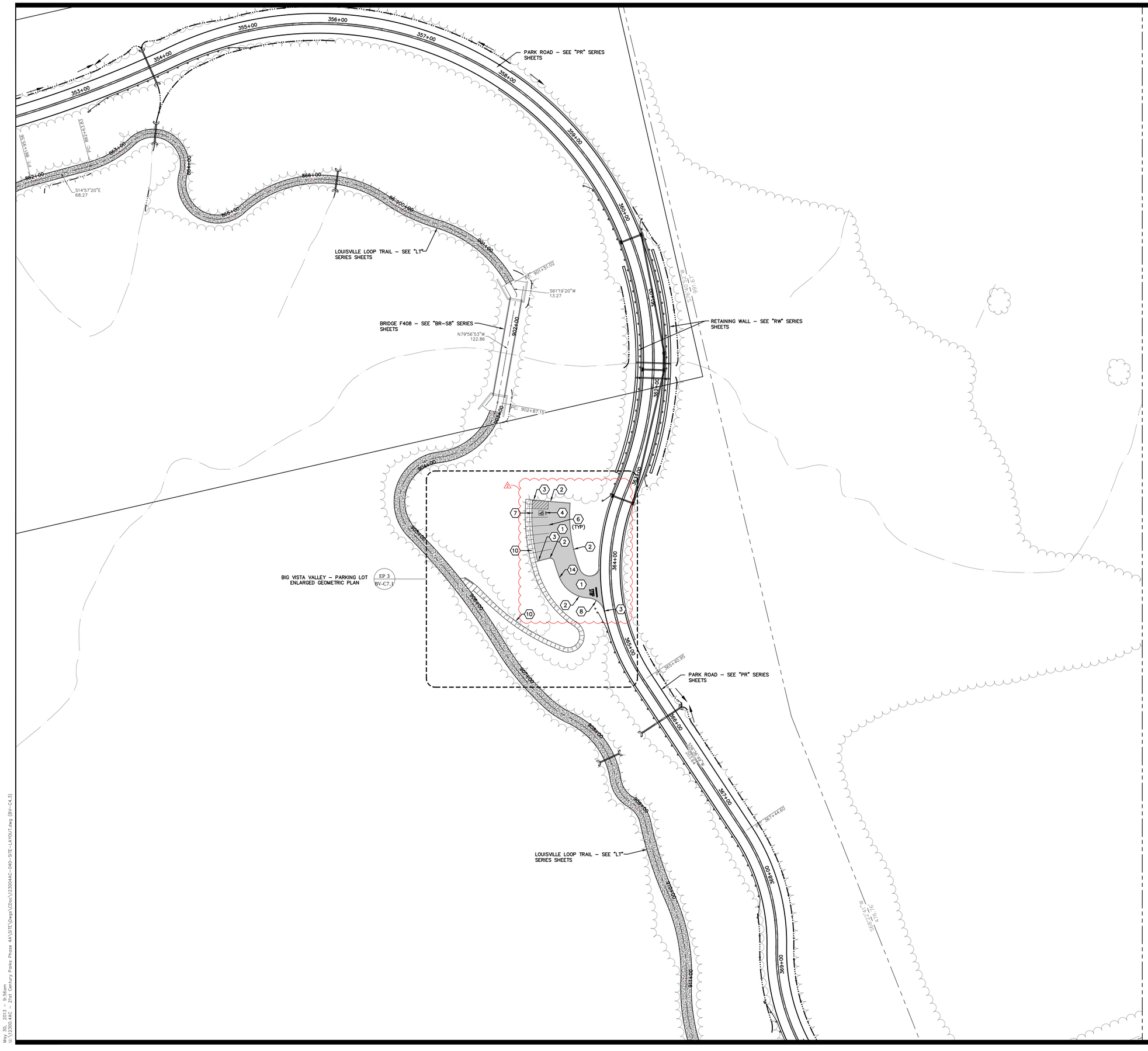

KEYNOTES (not all keynotes used this sheet)

1. CONSTRUCT ASPHALT PAVEMENT TO LIMITS INDICATED ON PLAN AND PER DETAIL 1, SHEET C9.1.
2. CONSTRUCT CONCRETE HEADER CURB TO LIMITS INDICATED ON PLAN AND PER DETAIL 4, SHEET C9.1.
3. CONSTRUCT CONCRETE CURB TAPER WHERE INDICATED ON PLAN AND PER DETAIL 5, SHEET C9.1.
4. "VAN ACCESSIBLE" PARKING STALL STRIPING – COORDINATE WITH "RS" SERIES SHEETS.
5. STANDARD ACCESSIBLE PARKING STALL STRIPING – COORDINATE WITH "RS" SERIES SHEETS.
6. PARKING STALL STRIPING – COORDINATE WITH "RS" SERIES SHEETS.
7. HANDICAP PARKING SIGN – COORDINATE WITH "RS" SERIES SHEETS.
8. STOP SIGN – COORDINATE WITH "RS" SERIES SHEETS.
9. "STOP" AND STOP BAR – COORDINATE WITH "RS" SERIES SHEETS.
10. CONSTRUCT CONCRETE SIDEWALK TO LIMITS INDICATED ON PLAN AND PER DETAIL 6, SHEET C9.1.
11. INSTALL LIMESTONE BENCH SEATING WHERE INDICATED ON PLAN AND PER DETAIL 7, SHEET C9.1.
12. INSTALL TEMPORARY CONSTRUCTION FENCE WHERE INDICATED ON PLAN. INSTALL FENCE PRIOR TO ANY NEW CONSTRUCTION OR LAND DISTURBING ACTIVITY.
13. CONSTRUCT CONCRETE FLUME WHERE INDICATED ON PLAN AND PER DETAIL 8, SHEET C9.1.
14. CONSTRUCT CONCRETE CURB BREAK WHERE INDICATED ON PLAN AND PER DETAIL 12, SHEET C9.1.
15. INSTALL FORD CROSSING WHERE INDICATED ON PLAN AND PER DETAIL 13, SHEET C9.1.
16. INSTALL 12' WIDE GRASSY PAVER ACCESS DRIVE (MAINTENANCE AND SERVICE VEHICLES) WHERE INDICATED ON PLAN AND PER DETAIL 5, SHEET 9.2.

Seals

STATE OF KENTUCKY
ROBERT D. MARTIN
15958
LICENSED
PROFESSIONAL ENGINEER

Robert D. Martin 5/8/13

Engineering
Planning

1046 East Chestnut Street, Louisville, Kentucky 40204
Phone: 502-585-2222 Internet: www.qk4.com
Kentucky • Indiana • Georgia • Tennessee • Florida

LANDSCAPE ARCHITECT
WRT
Wallace Roberts & Todd, LLC
1700 Market Street
28th Floor
Philadelphia, PA 19103
tel 215.732.5215
fax 215.732.2551

Architect
BRAVURA
111 West Washington Street
Louisville, Kentucky 40202
T: (502) 584-9900
F: (502) 584-0829

The Parklands of Floyds Fork, Project 4A

The Strand, Turkey Run Park and Broad Run
Louisville, Kentucky

Owner:
21st Century Parks, Inc.
371 W. Main St., Suite 202
Louisville, Kentucky 40202

REV #	DATE	DESCRIPTION
2	05-30-2013	Addendum #2: Clarified limits of concrete curb

Job No:	12300.4AC
Date:	May 8, 2013
Scale:	1" = 40'
Drawn By:	

BID SET

Drawing Title:
Parklands of Floyds Fork
Big Vista Valley PROJECT 4A Parking Lot Layout

Drawing No:
BV-C4.3

May 30, 2013 – 9:56am
U:\12300.4AC – 21st Century Parks Phase 4A\SITE\Dwgs\CDoc\12300.4AC-040-SITE-LAYOUT.dwg (BV-C4.3)

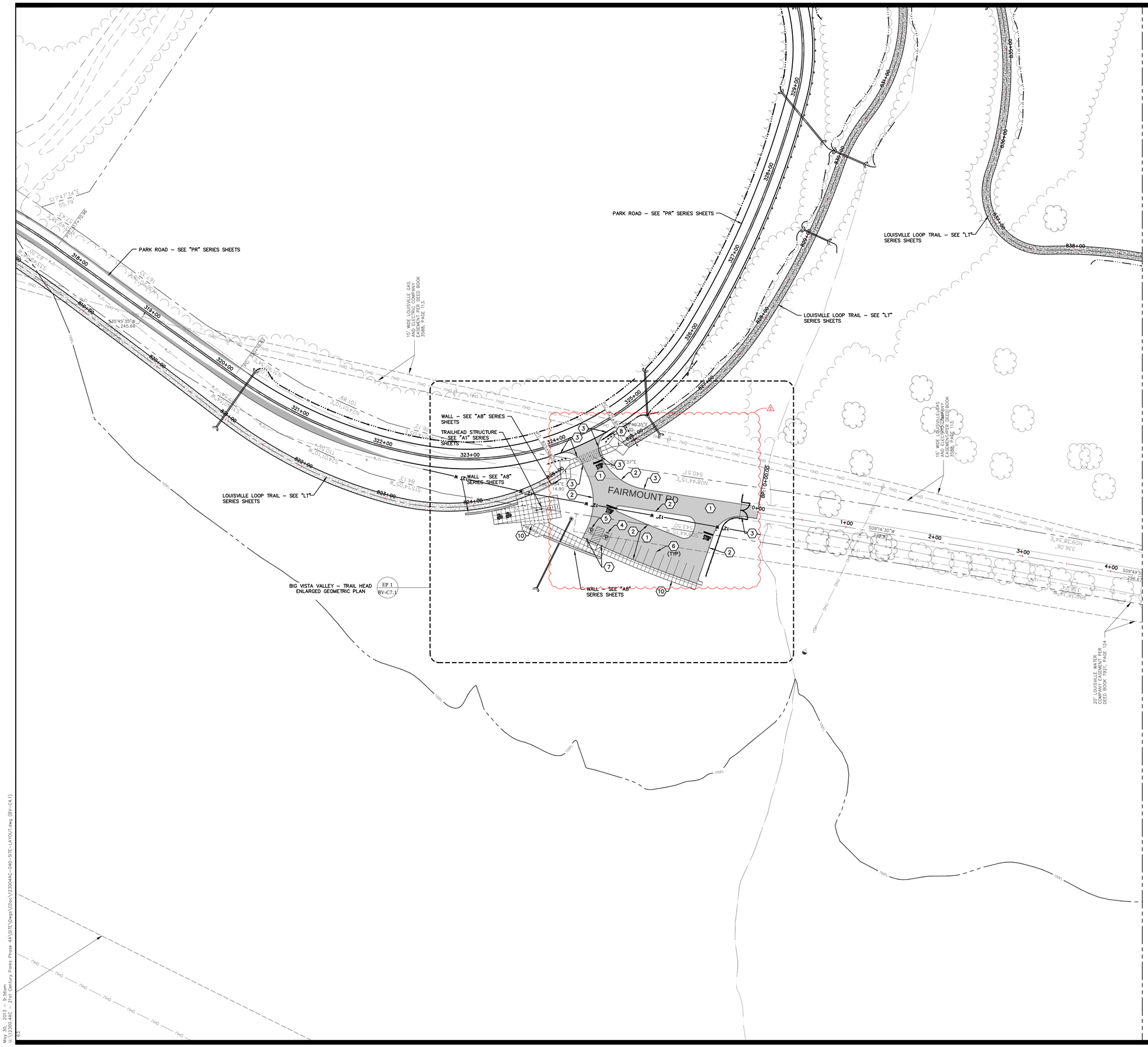

KEYNOTES (not all keynotes used this sheet)

1. CONSTRUCT ASPHALT PAVEMENT TO LIMITS INDICATED ON PLAN AND PER DETAIL 1, SHEET C9.1.
2. CONSTRUCT CONCRETE HEADER CURB TO LIMITS INDICATED ON PLAN AND PER DETAIL 4, SHEET C9.1.
3. CONSTRUCT CONCRETE CURB TAPER WHERE INDICATED ON PLAN AND PER DETAIL 5, SHEET C9.1.
4. "VAN ACCESSIBLE" PARKING STALL STRIPING – COORDINATE WITH "RS" SERIES SHEETS.
5. STANDARD ACCESSIBLE PARKING STALL STRIPING – COORDINATE WITH "RS" SERIES SHEETS.
6. PARKING STALL STRIPING – COORDINATE WITH "RS" SERIES SHEETS.
7. HANDICAP PARKING SIGN – COORDINATE WITH "RS" SERIES SHEETS.
8. STOP SIGN – COORDINATE WITH "RS" SERIES SHEETS.
9. "STOP" AND STOP BAR – COORDINATE WITH "RS" SERIES SHEETS.
10. CONSTRUCT CONCRETE SIDEWALK TO LIMITS INDICATED ON PLAN AND PER DETAIL 6, SHEET C9.1.
11. INSTALL LIMESTONE BENCH SEATING WHERE INDICATED ON PLAN AND PER DETAIL 7, SHEET C9.1.
12. INSTALL TEMPORARY CONSTRUCTION FENCE WHERE INDICATED ON PLAN. INSTALL FENCE PRIOR TO ANY NEW CONSTRUCTION OR LAND DISTURBING ACTIVITY.
13. CONSTRUCT CONCRETE FLUME WHERE INDICATED ON PLAN AND PER DETAIL 8, SHEET C9.1.
14. CONSTRUCT CONCRETE CURB BREAK WHERE INDICATED ON PLAN AND PER DETAIL 12, SHEET C9.1.
15. INSTALL FORD CROSSING WHERE INDICATED ON PLAN AND PER DETAIL 13, SHEET C9.1.
16. INSTALL 12' WIDE GRASSY PAVER ACCESS DRIVE (MAINTENANCE AND SERVICE VEHICLES) WHERE INDICATED ON PLAN AND PER DETAIL 5, SHEET 9.2.

Seals

STATE OF KENTUCKY
ROBERT D. MARTIN
15958
LICENSED
PROFESSIONAL ENGINEER
Robert D. Martin
5/8/13

Engineering
Planning
1046 East Chestnut Street, Louisville, Kentucky 40204
Phone: 502-585-2222 Internet: www.qk4.com
Kentucky • Indiana • Georgia • Tennessee • Florida

LANDSCAPE ARCHITECT
WRT
Wallace Roberts & Todd, LLC
1700 Market Street
28th Floor
Philadelphia, PA 19103
tel 215.732.5215
fax 215.732.2551

Architect
BRAVURA
111 West Washington Street
Louisville, Kentucky 40202
T: (502) 584-9900
F: (502) 584-0829

The Parklands of Floyds Fork, Project 4A

The Strand, Turkey Run Park and Broad Run
Louisville, Kentucky

Owner:
21st Century Parks, Inc.
371 W. Main St., Suite 202
Louisville, Kentucky 40202

REV #	DATE	DESCRIPTION
2	05-30-2013	Addendum #2: Clarified limits of concrete curb

Job No:	12300.4AC
Date:	May 8, 2013
Scale:	1" = 40'
Drawn By:	

BID SET

Drawing Title:
Parklands of Floyds Fork
Big Vista Valley PROJECT 4A Trail Head Layout

Drawing No:
BV-C4.1

May 30, 2013 – 9:56am
U:\12300.4AC – 21st Century Parks Phase 4A\SITE\Dwgs\CDoc\12300.4AC-040-SITE-LAYOUT.dwg (BV-C4.1)

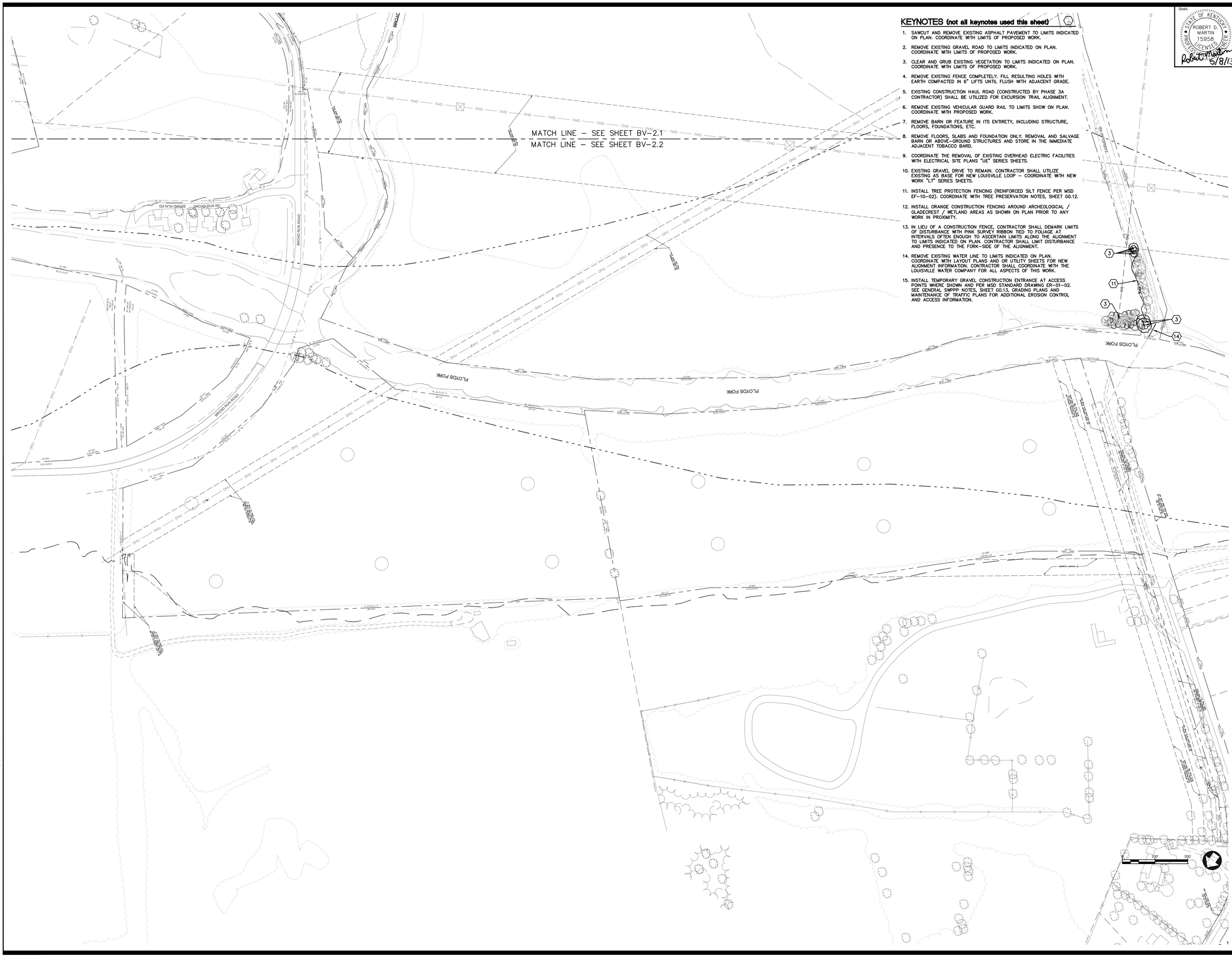

KEYNOTES (not all keynotes used this sheet)

1. SAWCUT AND REMOVE EXISTING ASPHALT PAVEMENT TO LIMITS INDICATED ON PLAN. COORDINATE WITH LIMITS OF PROPOSED WORK.
2. REMOVE EXISTING GRAVEL ROAD TO LIMITS INDICATED ON PLAN. COORDINATE WITH LIMITS OF PROPOSED WORK.
3. CLEAR AND GRUB EXISTING VEGETATION TO LIMITS INDICATED ON PLAN. COORDINATE WITH LIMITS OF PROPOSED WORK.
4. REMOVE EXISTING FENCE COMPLETELY. FILL RESULTING HOLES WITH EARTH COMPACTED IN 6" LIFTS UNTIL FLUSH WITH ADJACENT GRADE.
5. EXISTING CONSTRUCTION HAUL ROAD (CONSTRUCTED BY PHASE 3A CONTRACTOR) SHALL BE UTILIZED FOR EXCURSION TRAIL ALIGNMENT.
6. REMOVE EXISTING VEHICULAR GUARD RAIL TO LIMITS SHOW ON PLAN. COORDINATE WITH PROPOSED WORK.
7. REMOVE BARN OR FEATURE IN ITS ENTIRETY, INCLUDING STRUCTURE, FLOORS, FOUNDATIONS, ETC.
8. REMOVE FLOORS, SLABS AND FOUNDATION ONLY. REMOVAL AND SALVAGE BARN OR ABOVE–GROUND STRUCTURES AND STORE IN THE IMMEDIATE ADJACENT TOBACCO BARD.
9. COORDINATE THE REMOVAL OF EXISTING OVERHEAD ELECTRIC FACILITIES WITH ELECTRICAL SITE PLANS "UE" SERIES SHEETS.
10. EXISTING GRAVEL DRIVE TO REMAIN. CONTRACTOR SHALL UTILIZE EXISTING AS BASE FOR NEW LOUISVILLE LOOP – COORDINATE WITH NEW WORK "LT" SERIES SHEETS.
11. INSTALL TREE PROTECTION FENCING (REINFORCED SILT FENCE PER MSD EF–10–02). COORDINATE WITH TREE PRESERVATION NOTES, SHEET G0.12.
12. INSTALL ORANGE CONSTRUCTION FENCING AROUND ARCHEOLOGICAL / GLADECREST / WETLAND AREAS AS SHOWN ON PLAN PRIOR TO ANY WORK IN PROXIMITY.
13. IN LIEU OF A CONSTRUCTION FENCE, CONTRACTOR SHALL DEMARK LIMITS OF DISTURBANCE WITH PINK SURVEY RIBBON TIED TO FOLIAGE AT INTERVALS OFTEN ENOUGH TO ASCERTAIN LIMITS ALONG THE ALIGNMENT TO LIMITS INDICATED ON PLAN. CONTRACTOR SHALL LIMIT DISTURBANCE AND PRESENCE TO THE FORK–SIDE OF THE ALIGNMENT.
14. REMOVE EXISTING WATER LINE TO LIMITS INDICATED ON PLAN. COORDINATE WITH LAYOUT PLANS AND OR UTILITY SHEETS FOR NEW ALIGNMENT INFORMATION. CONTRACTOR SHALL COORDINATE WITH THE LOUISVILLE WATER COMPANY FOR ALL ASPECTS OF THIS WORK.
15. INSTALL TEMPORARY GRAVEL CONSTRUCTION ENTRANCE AT ACCESS POINTS WHERE SHOWN AND PER MSD STANDARD DRAWING ER–01–02. SEE GENERAL SWPPP NOTES, SHEET G0.13, GRADING PLANS AND MAINTENANCE OF TRAFFIC PLANS FOR ADDITIONAL EROSION CONTROL AND ACCESS INFORMATION.

Seals

STATE OF KENTUCKY
ROBERT D. MARTIN
15958
LICENSED
PROFESSIONAL ENGINEER
Robert Martin 5/8/13

Engineering
Planning
1046 East Chestnut Street, Louisville, Kentucky 40204
Phone: 502-585-2222 Internet: www.qk4.com
Kentucky • Indiana • Georgia • Tennessee • Florida

LANDSCAPE ARCHITECT
WRT
Wallace Roberts & Todd, LLC
1700 Market Street
28th Floor
Philadelphia, PA 19103
tel 215.732.5215
fax 215.732.2551

Architect
BRAVURA
111 West Washington Street
Louisville, Kentucky 40202
T: (502) 584-9900
F: (502) 584-0829

The Parklands of Floyds Fork, Project 4A

The Strand, Turkey Run Park and Broad Run
Louisville, Kentucky

Owner:
21st Century Parks, Inc.
371 W. Main St., Suite 202
Louisville, Kentucky 40202

REV #	DATE	DESCRIPTION
2	05-30-2013	Addendum #2: Sheet Reissued Whole

Job No:	12300.4AC
Date:	May 8, 2013
Scale:	1" = 100'
Drawn By:	

BID SET

Drawing Title:

Parklands of Floyds Fork

Big Vista Valley PROJECT 4A Demoliton and Tree Preservation

Drawing No:

BV-C2.2

May 31, 2013 – 2:08pm
C:\Users\fuller.PAI-NT\appdata\local\temp\AcPublish_596\123004AC-100-DEMOLITION.dwg (BV-C2.2)

KEYNOTES (not all keynotes used this sheet)

1. SAWCUT AND REMOVE EXISTING ASPHALT PAVEMENT TO LIMITS INDICATED ON PLAN. COORDINATE WITH LIMITS OF PROPOSED WORK.
2. REMOVE EXISTING GRAVEL ROAD TO LIMITS INDICATED ON PLAN. COORDINATE WITH LIMITS OF PROPOSED WORK.
3. CLEAR AND GRUB EXISTING VEGETATION TO LIMITS INDICATED ON PLAN. COORDINATE WITH LIMITS OF PROPOSED WORK.
4. REMOVE EXISTING FENCE COMPLETELY. FILL RESULTING HOLES WITH EARTH COMPACTED IN 6" LIFTS UNTIL FLUSH WITH ADJACENT GRADE.
5. EXISTING CONSTRUCTION HAUL ROAD (CONSTRUCTED BY PHASE 3A CONTRACTOR) SHALL BE UTILIZED FOR EXCURSION TRAIL ALIGNMENT.
6. REMOVE EXISTING VEHICULAR GUARD RAIL TO LIMITS SHOW ON PLAN. COORDINATE WITH PROPOSED WORK.
7. REMOVE BARN OR FEATURE IN ITS ENTIRETY, INCLUDING STRUCTURE, FLOORS, FOUNDATIONS, ETC.
8. REMOVE FLOORS, SLABS AND FOUNDATION ONLY. REMOVAL AND SALVAGE BARN OR ABOVE-GROUND STRUCTURES AND STORE IN THE IMMEDIATE ADJACENT TOBACCO BARD.
9. COORDINATE THE REMOVAL OF EXISTING OVERHEAD ELECTRIC FACILITIES WITH ELECTRICAL SITE PLANS "UE" SERIES SHEETS.
10. EXISTING GRAVEL DRIVE TO REMAIN. CONTRACTOR SHALL UTILIZE EXISTING AS BASE FOR NEW LOUISVILLE LOOP – COORDINATE WITH NEW WORK "LT" SERIES SHEETS.
11. INSTALL TREE PROTECTION FENCING (REINFORCED SILT FENCE PER MSD EF-10-02). COORDINATE WITH TREE PRESERVATION NOTES, SHEET G0.12.
12. INSTALL ORANGE CONSTRUCTION FENCING AROUND ARCHEOLOGICAL / GLADECREST / WETLAND AREAS AS SHOWN ON PLAN PRIOR TO ANY WORK IN PROXIMITY.
13. IN LIEU OF A CONSTRUCTION FENCE, CONTRACTOR SHALL DEMARK LIMITS OF DISTURBANCE WITH PINK SURVEY RIBBON TIED TO FOLIAGE AT INTERVALS OFTEN ENOUGH TO ASCERTAIN LIMITS ALONG THE ALIGNMENT TO LIMITS INDICATED ON PLAN. CONTRACTOR SHALL LIMIT DISTURBANCE AND PRESENCE TO THE FORK-SIDE OF THE ALIGNMENT.
14. REMOVE EXISTING WATER LINE TO LIMITS INDICATED ON PLAN. COORDINATE WITH LAYOUT PLANS AND OR UTILITY SHEETS FOR NEW ALIGNMENT INFORMATION. CONTRACTOR SHALL COORDINATE WITH THE LOUISVILLE WATER COMPANY FOR ALL ASPECTS OF THIS WORK.
15. INSTALL TEMPORARY GRAVEL CONSTRUCTION ENTRANCE AT ACCESS POINTS WHERE SHOWN AND PER MSD STANDARD DRAWING ER-01-02. SEE GENERAL SWPPP NOTES, SHEET G0.13, GRADING PLANS AND MAINTENANCE OF TRAFFIC PLANS FOR ADDITIONAL EROSION CONTROL AND ACCESS INFORMATION.

MATCH LINE – SEE SHEET BV-2.1
MATCH LINE – SEE SHEET SC-2.1

MATCH LINE – SEE SHEET CC-2.1
MATCH LINE – SEE SHEET BV-2.1

MATCH LINE – SEE SHEET BV-2.1
MATCH LINE – SEE SHEET BV-2.2

FAIRMOUNT RD
TROUTMONT RD
BROAD RUN CREEK
BROAD RUN ROAD
BROAD RUN RD
FLOYDS FORK

0 100' 200'

Seals

STATE OF KENTUCKY
ROBERT D. MARTIN
15958
LICENSED
PROFESSIONAL ENGINEER
5/8/13

Engineering
Planning

1046 East Chestnut Street, Louisville, Kentucky 40204
tel 502.584.7200 fax 502.584.7201
Kentucky • Indiana • Georgia • Tennessee • Florida

LANDSCAPE ARCHITECT
WRT
Wallace Roberts & Todd, LLC
1700 Market Street
28th Floor
Philadelphia, PA 19103
tel 215.732.5215
fax 215.732.2551

Architect
BRAVURA
111 West Washington Street
Louisville, Kentucky 40202
T: (502) 584-9900
F: (502) 584-0829

The Parklands of Floyds Fork, Project 4A

The Strand, Turkey Run Park and Broad Run

Louisville, Kentucky

Owner:
21st Century Parks, Inc.
371 W. Main St. Suite 202
Louisville, Kentucky 40202

REV.#	DATE	DESCRIPTION
2	05-30-2013	Addendum #2: Sheet Reissued Whole

Job No: 12300.4AC
Date: May 8, 2013
Scale: 1" = 100'
Drawn By:

BID SET

Drawing Title:

Parklands of Floyds Fork

Big Vista Valley
PROJECT 4A
Demolition and Tree Preservation

Drawing No:

BV-C2.1

May 31, 2013 – 2:08pm
C:\Users\User PM-1\Vaporstrail\Vocal\Vemp\AcPublish_5\#1\V2300AAC-100-DEMOLITION.dwg (BV-C2.1)

SWPPP GENERAL NOTES (LINEAR TRAIL AND ROAD CONSTRUCTION):

1. SEE INDIVIDUAL GRADING PLANS FOR AREA SPECIFIC BMP INSTALLATION AND PHASING NOTES.
2. GENERAL, CLEARING AND STABILIZATION CONTRACTORS MUST BE ALL BE UNDER CONTRACT PRIOR TO ISSUANCE OF MSD SITE DISTURBANCE PERMIT.
3. THE APPROVED STORMWATER POLLUTION PREVENTION PLAN (SWPPP) SHALL BE IMPLEMENTED PRIOR TO ANY LAND-DISTURBING ACTIVITY ON THE CONSTRUCTION SITE. ANY MODIFICATIONS TO THE APPROVED SWPPP MUST BE REVIEWED AND APPROVED BY MSD'S PRIVATE DEVELOPMENT REVIEW OFFICE. SWPPP BEST MANAGEMENT PRACTICES (BMP'S) SHALL BE INSTALLED PER THE PLAN AND MSD STANDARDS.
4. ALL STREAM AND NATURAL DRAINAGE DRAW CROSSINGS NECESSARY FOR CLEARING AND CONSTRUCTION ACTIVITIES MUST UTILIZE LOW-WATER CROSSING STRUCTURES PER MSD STANDARD DRAWING ER-02-00, OR HAVE PERMANENT PIPES INSTALLED PRIOR TO ADVANCING CONSTRUCTION ACTIVITY BEYOND THE STREAM OR DRAW. THEREFORE PIPE AND BEDDING MATERIAL MUST BE ON-SITE AS CLEARING OCCURS AND SHALL BE INSTALLED PER DETAIL 1, THIS SHEET.
5. LINEAR CONSTRUCTION (PARK ROAD, LOOP TRAIL AND EXCURSION TRAILS) DOES NOT NECESSARILY REQUIRE THE INSTALLATION OF BMP'S BEYOND WHAT IS SHOWN ON THE INDIVIDUAL GRADING PLANS AND DESCRIBED WITHIN THESE GENERAL NOTES DEPENDING ON THE LOCATION AND EXTENT OF THE DISTURBED AREA, AS WELL AS THE CURRENT AND EXPECTED WEATHER CONDITIONS. HOWEVER IT IS THE RESPONSIBILITY OF THE CONTRACTOR TO CONTROL EROSION AND SEDIMENT TRANSPORT TO THE SATISFACTION OF THE MSD INSPECTOR BY IMPLEMENTING A SELF-CONCEIVED STRATEGY THAT EITHER MINIMIZES CONCURRENT DISTURBED AREA, USES ADDITIONAL BMP'S OR A COMBINATION OF BOTH. EROSION CONTROL BMP MEASURES WHICH THE CONTRACTOR MAY UTILIZE INCLUDE, BUT ARE NOT LIMITED TO MSD STANDARD BMP MEASURES AS WELL AS TEMPORARY BLANKETING OF AREAS NOT YET TO FINAL GRADE, JUTE LOGS THROUGH WOODED AREAS, WOOD CHIP MULCHING, ETC. AS APPROVED BY THE MSD INSPECTOR IN THE FIELD. THE CONTRACTOR SHALL BID A SUFFICIENT QUANTITY OF EROSION CONTROL MEASURES NECESSARY TO FACILITATE CONSTRUCTION BASED ON THE ABOVE PARAMETERS AND THEIR STRATEGY FOR EXECUTION OF THE CONSTRUCTION PLAN. NO CHANGE ORDERS FOR EROSION CONTROL BMP INSTALLATION OR MAINTENANCE WILL BE CONSIDERED FOR AREAS RELATED TO CONSTRUCTION OF THE PARK ROAD, LOOP TRAIL AND EXCURSION TRAILS. IN DEVELOPING AN EROSION AND SEDIMENT CONTROL STRATEGY, THE CONTRACTOR SHALL EXPECT THE AMOUNT OF ACTUAL BMP INSTALLATION REQUIRED WILL BE DIRECTLY CORRELATED WITH THE AMOUNT OF DISTURBED AREA THAT EXISTS AT A GIVEN TIME AND SHALL INCLUDE, IN THE BASE BID, SUFFICIENT EROSION CONTROL ACCORDING TO HIS/HER MEANS AND METHODS.
6. WHERE CONSTRUCTION OR LAND DISTURBANCE ACTIVITY HAS TEMPORARILY CEASED ON ANY PORTION OF THE PROJECT, TEMPORARY SITE STABILIZATION MEASURES SHALL BE REQUIRED AS SOON AS PRACTICABLE, BUT NO LATER THAN FOURTEEN (14) CALENDAR DAYS AFTER THE ACTIVITY HAS CEASED.
7. ACTIONS MUST BE TAKEN BY THE CONTRACTOR TO MINIMIZE THE TRACKING OF MUD AND SOIL FROM CONSTRUCTION AREAS ONTO PUBLIC ROADWAYS. SOIL TRACKED ONTO THE ROADWAY MUST BE REMOVED DAILY.
8. SOIL STOCKPILES SHALL BE LOCATED AWAY FROM STREAMS, PONDS, SWALES AND CATCH BASINS. STOCKPILES SHALL BE SEEDED, MULCHED, AND ADEQUATELY CONTAINED THROUGH THE USE OF SILT FENCE. STOCKPILE AREAS MUST BE APPROVED BY THE OWNER AND THE MSD INSPECTOR.
9. THE CONTRACTOR MAY USE AREAS OF PROPOSED PARKING, KIOSKS AND OTHER SITE AMENITIES FOR STAGING. OTHER AREAS MAY BE AVAILABLE FOR USE, BUT MUST BE APPROVED BY THE OWNER AND MSD INSPECTOR. STORAGE/STAGING IN THE FLOODWAY IS NOT PERMITTED. AT THE DISCRETION OF THE MSD INSPECTOR, THE LOCATION'S FEASIBILITY MAY NEED REVIEWED BY THE OWNER'S ENGINEER AND APPROVED VIA REDLINE REVISION BY MSD PLAN REVIEW STAFF.
10. SEDIMENT-LADEN GROUNDWATER ENCOUNTERED DURING TRENCHING, BORING OR OTHER EXCAVATION ACTIVITY SHALL BE PUMPED TO A SEDIMENT TRAPPING DEVICE PRIOR TO BEING DISCHARGED INTO A STREAM, POOL, SWALE OR CATCH BASIN.
11. DISTURBED AREAS ADJACENT TO PARK ROAD SHALL BE FINAL STABILIZED PER THE FOLLOWING SCHEDULE:
    - *SLOPES FLATTER THAN 3:1-SEED WITH MOWN LAWN MIX (SEE SHEET G0.10) AND STRAW MULCH.
    - *SLOPES 2:1 TO 3:1-SEED WITH MOWN LAWN MIX AND PROTECT WITH NORTH AMERICAN GREEN S150 STRAW BLANKET INSTALLED PER MSD DETAIL EC-07-01.
    - *SLOPES STEEPER THAN 2:1 (NOT EXPOSED ROCK FACE)-SEED AND PROTECT USING "EROSION CONTROL BLANKET-STEEP SLOPES" DETAIL AND SEED MIX (SEE SHEET C9.1).
    - *AROUND BRIDGES (WITHOUT SPECIALTY BIOENGINEERED PLANTINGS)-USE MOWN LAWN SOD.
    - *AROUND ALL CULVERTS WITH SLOPES FLATTER THAN 3:1-USE MOWN LAWN SOD.
    - *AROUND 24" CULVERTS OR SMALLER WITH SLOPES 3:1 AND STEEPER-USE "DRY CHANNEL BANK STABILIZATION" (SEE SHEET C9.1).
    - *AROUND CULVERTS LARGER THAN 24" WITH SLOPES 3:1 AND STEEPER-USE "WET CHANNEL BANK STABILIZATION" (SEE SHEET C9.1).
    - *NEW DITCH FLOWLINES-SEED WITH MOWN LAWN MIX AND PROTECT WITH NORTH AMERICAN GREEN S150 STRAW BLANKET INSTALLED PER MSD DETAIL EC-07-01.
    - *DISTURBED EXISTING FLOWLINES (CONTRIBUTING TO 24" CULVERT OR SMALLER)-USE "DRY CHANNEL BANK STABILIZATION".
    - *DISTURBED EXISTING FLOWLINES (CONTRIBUTING TO CULVERTS LARGER THAN 24")-USE "WET CHANNEL BANK STABILIZATION".
12. DISTURBED AREAS ADJACENT TO LOOP TRAIL AND EXCURSION TRAIL IN NON WOODED AREA SHALL BE FINAL STABILIZED PER THE FOLLOWING SCHEDULE:
    - *SLOPES FLATTER THAN 3:1 IN FLOODPLAIN-SEED WITH WILDFLOWER/MEADOW WET RIPARIAN MIX (SEE SHEET G0.10) AND STRAW MULCH.
    - *SLOPES FLATTER THAN 3:1 NOT IN FLOODPLAIN-SEED WITH WILDFLOWER/MEADOW DRY MIX (SEE SHEET G0.10) AND STRAW MULCH.
    - *SLOPES 2:1 TO 3:1 IN FLOODPLAIN-SEED WITH WILDFLOWER/MEADOW WET RIPARIAN MIX AND PROTECT WITH NORTH AMERICAN GREEN S150 STRAW BLANKET INSTALLED PER MSD DETAIL EC-07-01.
    - *SLOPES 2:1 TO 3:1 NOT IN FLOODPLAIN-SEED WITH WILDFLOWER/MEADOW DRY MIX AND PROTECT WITH NORTH AMERICAN GREEN S150 STRAW BLANKET INSTALLED PER MSD DETAIL EC-07-01.
    - *SLOPES STEEPER THAN 2:1 (NOT EXPOSED ROCK FACE)-SEED AND PROTECT USING "EROSION CONTROL BLANKET-STEEP SLOPES" DETAIL AND SEED MIX.
    - *AROUND BRIDGES (WITHOUT SPECIALTY BIO-ENGINEERED PLANTINGS)-SEED WITH WILDFLOWER/MEADOW WET RIPARIAN MIX AND PROTECT WITH NORTH AMERICAN GREEN S150 STRAW BLANKET INSTALLED PER MSD DETAIL EC-07-01.
    - *AROUND ALL CULVERTS WITH SLOPES FLATTER THAN 3:1-SEED WITH WILDFLOWER/MEADOW WET RIPARIAN MIX AND PROTECT WITH NORTH AMERICAN GREEN S150 STRAW BLANKET INSTALLED PER MSD DETAIL EC-07-01.
    - *AROUND 24" CULVERTS OR SMALLER WITH SLOPES 3:1 AND STEEPER-USE "DRY CHANNEL BANK STABILIZATION".
    - *AROUND CULVERTS LARGER THAN 24" WITH SLOPES 3:1 AND STEEPER-USE "WET CHANNEL BANK STABILIZATION".
    - *NEW DITCH FLOWLINES-SEED WITH WILDFLOWER/MEADOW WET RIPARIAN MIX AND PROTECT WITH NORTH AMERICAN GREEN S150 STRAW BLANKET INSTALLED PER MSD DETAIL EC-07-01.
    - *DISTURBED EXISTING FLOWLINES (CONTRIBUTING TO 24" CULVERT OR SMALLER)-USE "DRY CHANNEL BANK STABILIZATION".
    - *DISTURBED EXISTING FLOWLINES (CONTRIBUTING TO CULVERTS LARGER THAN 24")-USE "WET CHANNEL BANK STABILIZATION".
13. DISTURBED AREA ADJACENT TO LOOP TRAIL AND EXCURSION TRAIL IN WOODED AREAS SHALL NOT BE SEEDED BUT STABILIZED WITH WOOD CHIPS GENERATED FROM CLEARING OPERATION.
14. DITCH FLOWLINES ADJACENT TO PRE-SPLIT ROCK FACE CONDITION SHALL BE BEDROCK, DO NOT FILL FLOWLINE WITH SOIL TO SEED/SOD.
15. CONTRACTOR SHALL INSTALL TEMPORARY GRAVEL CONSTRUCTION ENTRANCES WHERE INDICATED ON DEMOLITION AND TREE PRESERVATION SHEETS AND PER MSD STANDARD DETAIL ER-01-02. ENTRANCES SHALL BE INSTALLED AS EARLY AS POSSIBLE DURING THE INITIAL PERPETRATION WORK PRIOR TO ANY CONSTRUCTION TRAFFIC.
16. IF FINAL STABILIZATION CANNOT OCCUR DUE TO THE REMOVAL OF INVASIVE WEEDS OR OTHER REASONS, BMP'S MUST BE INSTALLED TO CONTROL EROSION UNTIL THE AREAS CAN BE STABILIZED.

TEMPORARY STREAM CROSSING NOTES

1. ANY STREAM CROSSING PROPOSED BY THE CONTRACTOR, AS A MEANS TO FACILITATE WORK, SHALL BE THE SOLE RESPONSIBILITY OF THE CONTRACTOR. FURTHERMORE, DURING BIDDING, THE CONTRACTOR ASSUMES ALL RISK AND COST FOR ANY PROPOSED STREAM CROSSINGS, AND SHALL INCLUDE COST OF PERMITTING AND CONSTRUCTION AS INCIDENTAL TO THE COST OF THE RELATED BRIDGE CONSTRUCTION - NO ADDITIONAL COSTS OR CHANGE ORDERS SHALL BE CONSIDERED FOR THE CONSTRUCTION OF ANY PROPOSED TEMPORARY STREAM CROSSINGS.
2. CONTRACTOR SHALL BE RESPONSIBLE FOR ALL TEMPORARY STREAM CROSSINGS INCLUDING, BUT NOT LIMITED TO; DESIGN, PERMITTING, CONSTRUCTION, MAINTENANCE, REMOVAL AND RESTORATION TO THE OWNER'S SATISFACTION OF STREAM/ EMBANKMENT AS NECESSARY TO FACILITATE CONSTRUCTION. CONTRACTOR SHALL PROVIDE OWNER'S ENGINEER WITH A DETAILED DESIGN OF THESE CROSSING(S) FOR REVIEW PRIOR TO CONSTRUCTION. THE DESIGN OF THE TEMPORARY STREAM CROSSINGS SHALL CONSIDER AND ADDRESS; CANOE TRAFFIC WITHIN THE FORK, HIGH WATER CONDITIONS AND RELATED FLOW RATES, LOW WATER CONDITIONS AND RELATED FLOW RATES, EROSION AND IT'S PREVENTION, ANTICIPATED TRAFFIC LOADS, EVACUATION PLANS IN THE EVENT OF A SUDDEN HIGH WATER CONDITION (PARTICULARLY DURING THE CONSTRUCTION OF F-402) AND LIMITS OF CLEARING.
3. PERMITS OR CONCURRENCE FROM USACE, KDOW, AND MSD ARE REQUIRED. CONTRACTOR IS RESPONSIBLE FOR THE INCLUSION OF REVIEW TIME WITH THE REGULATORY AGENCIES AS REQUIRED TO OBTAIN THE NECESSARY PERMITS WITHIN THE PROJECT SCHEDULE AND COMPLETION DATE SUBMITTED AS PART OF THE PROJECT BID.

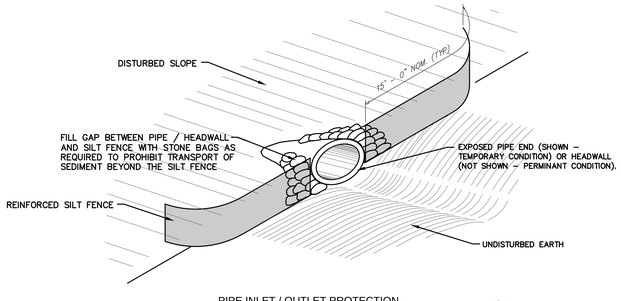

PIPE INLET / OUTLET PROTECTION
DETAIL
SCALE: NONE
1 / G0.13

SWPPP GENERAL NOTES (SITE AREA/BRIDGE CONSTRUCTION):

1. SEE INDIVIDUAL GRADING PLANS FOR AREA SPECIFIC BMP INSTALLATION AND PHASING NOTES.
2. GENERAL, CLEARING AND STABILIZATION CONTRACTORS MUST BE ALL BE UNDER CONTRACT PRIOR TO ISSUANCE OF MSD SITE DISTURBANCE PERMIT.
3. THE APPROVED STORMWATER POLLUTION PREVENTION PLAN (SWPPP) SHALL BE IMPLEMENTED PRIOR TO ANY LAND-DISTURBING ACTIVITY ON THE CONSTRUCTION SITE. ANY MODIFICATIONS TO THE APPROVED SWPPP MUST BE REVIEWED AND APPROVED BY MSD'S PRIVATE DEVELOPMENT REVIEW OFFICE. SWPPP BEST MANAGEMENT PRACTICES (BMP'S) SHALL BE INSTALLED PER THE PLAN AND MSD STANDARDS.
4. WHERE CONSTRUCTION OR LAND DISTURBANCE ACTIVITY HAS TEMPORARILY CEASED ON ANY PORTION OF THE PROJECT, TEMPORARY SITE STABILIZATION MEASURES SHALL BE REQUIRED AS SOON AS PRACTICABLE, BUT NO LATER THAN FOURTEEN (14) CALENDAR DAYS AFTER THE ACTIVITY HAS CEASED.
5. ACTIONS MUST BE TAKEN BY THE CONTRACTOR TO MINIMIZE THE TRACKING OF MUD AND SOIL FROM CONSTRUCTION AREAS ONTO PUBLIC ROADWAYS. SOIL TRACKED ONTO THE ROADWAY MUST BE REMOVED DAILY.
6. SOIL STOCKPILES SHALL BE LOCATED AWAY FROM STREAMS, PONDS, SWALES AND CATCH BASINS. STOCKPILES SHALL BE SEEDED, MULCHED, AND ADEQUATELY CONTAINED THROUGH THE USE OF SILT FENCE. STOCKPILE AREAS MUST BE APPROVED BY THE OWNER AND THE MSD INSPECTOR.
7. THE CONTRACTOR MAY USE AREAS OF PROPOSED PARKING, KIOSKS AND OTHER SITE AMENITIES FOR STAGING. OTHER AREAS MAY BE AVAILABLE FOR USE, BUT MUST BE APPROVED BY THE OWNER AND MSD INSPECTOR. STORAGE/STAGING IN THE FLOODWAY IS NOT PERMITTED. AT THE DISCRETION OF THE MSD INSPECTOR, THE LOCATION'S FEASIBILITY MAY NEED REVIEWED BY THE OWNER'S ENGINEER AND APPROVED VIA REDLINE REVISION BY MSD PLAN REVIEW STAFF.
8. SEDIMENT-LADEN GROUNDWATER ENCOUNTERED DURING TRENCHING, BORING OR OTHER EXCAVATION ACTIVITY SHALL BE PUMPED TO A SEDIMENT TRAPPING DEVICE PRIOR TO BEING DISCHARGED INTO A STREAM, POOL, SWALE OR CATCH BASIN.
9. DISTURBED AREAS ADJACENT TO PARKING LOTS AND TRAILHEADS SHALL BE FINAL STABILIZED PER THE FOLLOWING SCHEDULE:
    - *SLOPES FLATTER THAN 3:1-SEED WITH MOWN LAWN MIX (SEE SHEET G0.10) AND STRAW MULCH.
    - *SLOPES 2:1 TO 3:1-SEED WITH MOWN LAWN MIX AND PROTECT WITH NORTH AMERICAN GREEN S150 STRAW BLANKET INSTALLED PER MSD DETAIL EC-07-01.
    - *SLOPES STEEPER THAN 2:1 (NOT EXPOSED ROCK FACE)-SEED AND PROTECT USING "EROSION CONTROL BLANKET-STEEP SLOPES" DETAIL AND SEED MIX (SEE SHEET C9.1).
    - *AROUND BRIDGES (WITHOUT SPECIALTY BIOENGINEERED PLANTINGS)-USE MOWN LAWN SOD.
    - *AROUND ALL CULVERTS WITH SLOPES FLATTER THAN 3:1-USE MOWN LAWN SOD.
    - *AROUND 24" CULVERTS OR SMALLER WITH SLOPES 3:1 AND STEEPER-USE "DRY CHANNEL BANK STABILIZATION" (SEE SHEET C9.1).
    - *AROUND CULVERTS LARGER THAN 24" WITH SLOPES 3:1 AND STEEPER-USE "WET CHANNEL BANK STABILIZATION" (SEE SHEET C9.1).
    - *NEW DITCH FLOWLINES-SEED WITH MOWN LAWN MIX AND PROTECT WITH NORTH AMERICAN GREEN S150 STRAW BLANKET INSTALLED PER MSD DETAIL EC-07-01.
    - *DISTURBED EXISTING FLOWLINES (CONTRIBUTING TO 24" CULVERT OR SMALLER)-USE "DRY CHANNEL BANK STABILIZATION".
    - *DISTURBED EXISTING FLOWLINES (CONTRIBUTING TO CULVERTS LARGER THAN 24")-USE "WET CHANNEL BANK STABILIZATION".
10. DISTURBED AREAS ADJACENT TO CANOE LAUNCHES AND BRIDGES SHALL BE FINAL STABILIZED PER THE FOLLOWING SCHEDULE:
    - *SLOPES FLATTER THAN 3:1 IN FLOODPLAIN-SEED WITH WILDFLOWER/MEADOW WET RIPARIAN MIX (SEE SHEET G0.10) AND STRAW MULCH.
    - *SLOPES FLATTER THAN 3:1 NOT IN FLOODPLAIN-SEED WITH WILDFLOWER/MEADOW DRY MIX (SEE SHEET G0.10) AND STRAW MULCH.
    - *SLOPES 2:1 TO 3:1 IN FLOODPLAIN-SEED WITH WILDFLOWER/MEADOW WET RIPARIAN MIX AND PROTECT WITH NORTH AMERICAN GREEN S150 STRAW BLANKET INSTALLED PER MSD DETAIL EC-07-01.
    - *SLOPES 2:1 TO 3:1 NOT IN FLOODPLAIN-SEED WITH WILDFLOWER/MEADOW DRY MIX AND PROTECT WITH NORTH AMERICAN GREEN S150 STRAW BLANKET INSTALLED PER MSD DETAIL EC-07-01.
    - *SLOPES STEEPER THAN 2:1 (NOT EXPOSED ROCK FACE)-SEED AND PROTECT USING "EROSION CONTROL BLANKET-STEEP SLOPES" DETAIL AND SEED MIX.
    - *AROUND BRIDGES (WITHOUT SPECIALTY BIO-ENGINEERED PLANTINGS)-SEED WITH WILDFLOWER/MEADOW WET RIPARIAN MIX AND PROTECT WITH NORTH AMERICAN GREEN S150 STRAW BLANKET INSTALLED PER MSD DETAIL EC-07-01.
    - *AROUND ALL CULVERTS WITH SLOPES FLATTER THAN 3:1-SEED WITH WILDFLOWER/MEADOW WET RIPARIAN MIX AND PROTECT WITH NORTH AMERICAN GREEN S150 STRAW BLANKET INSTALLED PER MSD DETAIL EC-07-01.
    - *AROUND 24" CULVERTS OR SMALLER WITH SLOPES 3:1 AND STEEPER-USE "DRY CHANNEL BANK STABILIZATION".
    - *AROUND CULVERTS LARGER THAN 24" WITH SLOPES 3:1 AND STEEPER-USE "WET CHANNEL BANK STABILIZATION".
    - *NEW DITCH FLOWLINES-SEED WITH WILDFLOWER/MEADOW WET RIPARIAN MIX AND PROTECT WITH NORTH AMERICAN GREEN S150 STRAW BLANKET INSTALLED PER MSD DETAIL EC-07-01.
    - *DISTURBED EXISTING FLOWLINES (CONTRIBUTING TO 24" CULVERT OR SMALLER)-USE "DRY CHANNEL BANK STABILIZATION".
    - *DISTURBED EXISTING FLOWLINES (CONTRIBUTING TO CULVERTS LARGER THAN 24")-USE "WET CHANNEL BANK STABILIZATION".
11. CONTRACTOR SHALL INSTALL TEMPORARY GRAVEL CONSTRUCTION ENTRANCES WHERE INDICATED ON DEMOLITION AND TREE PRESERVATION SHEETS AND PER MSD STANDARD DETAIL ER-01-02. ENTRANCES SHALL BE INSTALLED AS EARLY AS POSSIBLE DURING THE INITIAL PERPETRATION WORK PRIOR TO ANY CONSTRUCTION TRAFFIC.
12. IF FINAL STABILIZATION CANNOT OCCUR DUE TO THE REMOVAL OF INVASIVE WEEDS OR OTHER REASONS, BMP'S MUST BE INSTALLED TO CONTROL EROSION UNTIL THE AREAS CAN BE STABILIZED.
13. SEE BIOENGINEERING (BE SERIES) SHEETS FOR PERMANENT EROSION CONTROL AND STABILIZATION MEASURES AROUND BRIDGES F401, F402, F403, F404, F408, F409 AND F411.
14. SEE BIOENGINEERING (BE SERIES) SHEETS FOR PERMANENT EROSION CONTROL AND STABILIZATION MEASURES AROUND CANOE LAUNCHES.

Seals

STATE OF KENTUCKY
ROBERT D. MARTIN
15958
LICENSED
PROFESSIONAL ENGINEER
Robert D. Martin 5/8/13

Engineering
Planning
1046 East Chestnut Street Louisville, Kentucky 40204
T: (502) 584-9900 F: (502) 584-0829
Kentucky • Indiana • Georgia • Tennessee • Florida

LANDSCAPE ARCHITECT
WRT
Wallace Roberts & Todd, LLC
1700 Market Street
28th Floor
Philadelphia, PA 19103
tel 215.732.5215
fax 215.732.2551

Architect
BRAVURA
111 West Washington Street
Louisville, Kentucky 40202
T: (502) 584-9900
F: (502) 584-0829

The Parklands of Floyds Fork, Project 4A
The Strand, Turkey Run Park and Broad Run
Louisville, Kentucky

Owner:
21st Century Parks, Inc.
371 W. Main St., Suite 202
Louisville, Kentucky 40202

REV #	DATE	DESCRIPTION
2	05-30-2013	Addendum #2: Modified notes pursuant to MSD approval

Job No: 12300.4AC
Date: May 8, 2013
Scale: NTS
Drawn By:
BID SET

Drawing Title:
Parklands of Floyds Fork
PROJECT 4A Summary Sheet, SWPPPNotes and Legend

Drawing No:
G 0.13

May 31, 2013 - 2:23pm
M:\12300.4AC - 21st Century Parks Phase 4A\SITE\Dwgs\Cds\V12300.4AC - COVER.dwg (G0.13)

THE PARKLANDS OF FLOYDS FORK – PROJECT 3A
SOUTH BECKLEY CREEK PARK & POPE LICK PARK

ADDENDUM NO. 2
May 31, 2013

THE PARKLANDS OF FLOYDS FORK – PROJECT 4A
THE STRAND, TURKEY RUN PARK AND BROAD RUN PARK

SUMMARY OF QUESTIONS AND ANSWERS SUBMITTED DURING THE BIDDING PHASE

Question:
In order to maintain consistency between the projects it would greatly benefit the contractor if information regarding previous specialty contractors and suppliers could be provided. If this information is available how can we obtain it?
Answer:
A list of known specialty subcontractors/ suppliers will be posted in the project related information. NOTE - This list is not meant to qualify or endorse specific contractors or suppliers and is not intended to include every supplier and subcontractor involved in the previous phases of work at the Parklands. The following is a partial list of some of those known to be involved in specific areas of work. No subcontractor or supplier is intentionally excluded from this list. The General Contractors bidding Project 4A are encouraged to seek qualified competitive bids for all areas of work within the project and specifications. Previous General Contractors involved in federally funded Parkland projects include MAC Construction and Louisville Paving Company.

Question:
Drawing RW-C1.8 Refers to a detail RR3 on sheet C2.1 That detail doesn't appear on that sheet or any other sheet I see.
Answer:
Revised Sheet RW-C2.1 now shows RR3 Detail which is also reflected on Roadway Typical Section Sheet PRC3.1. Revised Sheet RW-C2.1 is included in Addendum #1.

Question:
On sheet RW-C1.2 the layout denotes an AB-wall but the wall profile drawing denotes a RR-2. This drawing also denotes that the cap stone be four sided and spaced with a six inch gap between them. If you look at the RR-2 detail it shows the cap stones sitting on top of a 28" block without knobs. This will expose the gravel wedge between the blocks at every third block. Does this need to be changed to a free standing block instead?
Answer:
The RR2 reference is correct, the AB reference is incorrect. The cap stone shall have a finished texture on all four sides. The block below the cap stone shall be a free standing block type without knobs, with a finished top condition to avoid exposure of the connecting knobs or gravel

THE PARKLANDS OF FLOYDS FORK – PROJECT 3A
SOUTH BECKLEY CREEK PARK & POPE LICK PARK

wedges within the 6" gaps of the cap stones.

Question:
On RW C2.1 The Pipe headwall for AB type wall cross section denotes Redi-Rock blocks on the drawings. Is this labeled correctly?
Answer:
Labeled correctly, graphically incorrect. Revised Sheet RW-C2.1 now shows a typical AB (Allan Block) unit cross section. Revised Sheet RW-C2.1 is included in Addendum #1.

Question:
In regards to the catenary bridge, do you know a steel erector that has built this bridge type?
Answer:
A steel erector that OPAC has worked with on several cable-supported steel frame projects is Adams & Smith of Lindon, UT. Their website is http://www.adamsandsmith.com/. Their phone number is (801)785-6400. Ask for Jeff Darby.

Question:
In regards to the catenary bridge, is it pre-fabricated and lifted into place, or build in place?
Answer:
Components of the catenary bridge are possible to be prefabricated, but the catenary bridge as a whole is built/assembled in place.

Question:
On Sheet RW-C1.2, the drawings call for the cap stone to be placed with 6" gaps. It's possible to do this, but not with the cap stone spec'd. It would result in aesthetically unwanted gaps in every third block that would be visible.
Answer:
Corrected as issued on Sheets RW-C1.4, RW-C1.7 and RW-C1.8 in Addendum #2.

Question:
Sheet RW-C1.8 references "RR3", which does not exist on the sheet indicated.
Answer:
Corrected as issued on Sheets RW-C1.4, RW-C1.7 and RW-C1.8 in Addendum #2.

Question:
On Sheet RW-C1.8, the elevation calls for a 9" cap stone. Redi-Rock capstones are not 9" thick.
Answer:
Corrected as issued on Sheets RW-C1.4, RW-C1.7 and RW-C1.8 in Addendum #2.

Question:
SP3-101: It shows bollard light fixtures, but there is nothing in the fixture schedule about these fixtures?
Answer:
These fixtures are type OL3. Addendum #2 indicates manufacturer, model number and wiring requirements.

THE PARKLANDS OF FLOYDS FORK – PROJECT 3A
SOUTH BECKLEY CREEK PARK & POPE LICK PARK

Question:
E1-001: On the outdoor lighting control schematic it shows to panel TP2 and it shows that on all the control schematic drawings. There is no TP2.
Answer:
Addendum #2 clarified that it should reference 'SP1' in lieu of 'TP2'.

Question:
E1-101: On panel board SP1 wiring schedule, circuit # 2 shows signage where is the sign and what type of fixture is in it or points at it?
Answer:
Addendum # 2 clarifies that panelboard schedule, circuit #2 should read "EF-1 " and not "signage".

Question:
E1-101: Does the feed to the outdoor fixtures need to be concrete encased?
Answer:
Lighting branch circuits to exterior light fixtures do not need to be concrete encased.

Question:
E3-101: In the restrooms it shows a occupancy sensor and a light switch. Do you need both?
Answer:
Addendum #2 indicates the light switches being omitted.

Question:
E3-101: In the mechanical room it shows a PTS switch at the far end of the rom. Do you want the switch next to the door?
Answer:
Addendum #2 indicates the switch being relocated adjacent to the door and changing to an occupancy sensor.

Question:
E3-101: Tagged note 4 it states supply a 60A/250V/2P disconnect for the sewage ejection pump. I don't see a tagged note 4 and I don't see a ejection pump on the wiring schedule.
Answer:
Addendum #2 revises the wiring for the sewage ejector pump and is scheduled.

Question:
E3-102: Do the 3-4" conduits and the 1-4" conduit turn up inside the mechanical room?
Answer:
The four (4) referenced conduits are to extend past the building.

Question:
E4-001: There are no panel board or wiring schedule, no detail of how the lighting control is to be mounted to the power pedestal.
Answer:

THE PARKLANDS OF FLOYDS FORK – PROJECT 3A
SOUTH BECKLEY CREEK PARK & POPE LICK PARK

Addendum #2 indicates that the panel, meter and controls are to be located in a stainless steel Milbank Service Pedestal.

Question:
E4-001: There are no power riser feeders or tagged notes, are you wanting 3-4/0 in that little 12 space panel?
Answer:
Addendum #2 indicates the power riser feeders and tagged notes.

Question:
E4-001: OL1 shows as a wall mounted flood light. Is this correct? Or does it require a pole and pole base?
Answer:
Addendum #2 indicates revised light fixture type and pole.

Question:
E5-101: In floor plan- power/systems note 1 points to three conduits, but tagged notes make no mention of them?
Answer:
Addendum #2 omits these conduits.

Question:
E5-101: Floor plan shows only two hand dryers but 4 circuits are shown 1,3,5, and 7 all single pole?
Answer:
Addendum #2 indicates revised panel schedule for a quantity of 2 hand dryers.

Question:
E5-101: Power distribution riser diagram shows a 200 amp 2P main circuit breaker. Panel board and wiring schedule show a 100 breaker and name plate although typical shows 150 amp?
Answer:
Addendum #2 indicates main to be 100amp/2P.

Question:
E5-101: Schedule shows 2-R1 and 1-R2 is this correct?
Answer:
Addendum #2 indicates 1-R1 and 1-R2.

Question:
E5-101: Is the OS switch in the mech. Room wall mounted?
Answer:
Wall mounted per the plans.

Question:
E5-101: This is the only panel schedule that shows a TVSS in it.
Answer:

THE PARKLANDS OF FLOYDS FORK – PROJECT 3A
SOUTH BECKLEY CREEK PARK & POPE LICK PARK

Addendum #2 revises TVSS mounting to match others.

Question:
UE-103: Enlarged electrical plans it shows a S.S. pedestal for park lot controls, is there a detail on this item?
Answer:
Addendum #2 omits the Service Pedestal. Controls are to be located adjacent to panel in Stout House.

Question:
UE-103: Is there a detail on the 24" PP outlet?
Answer:
Addendum #2 omits 24” PP.

Question:
UE-103: There is no fixture schedule on the OL2 fixture.
Answer:
Addendum #2 indicates light fixture manufacturer and model number.

Question:
Can the bid date be postponed on the Parklands of Floyds Fork (PRJ4A) due to the large size of the project and the fact that the project is bid as a lump sum. This would give the contractors more time to gather information and complete their takeoffs.
Answer:
No, the bid letting date will not be extended.

Question:
On sheet SV-C4.1, it is unclear where curb is being required and where it is not. Curb is called out and depicted along the North side of the Trail Head Parking Lot and also at the island at the end of Canoe Launch area. It seems there is curb depicted in other areas on this sheet, but not called out. Such as coming in the entrance and also along the Canoe launch drive. Can some clarification be given to where, exactly curb is intended / not intended here?
Answer:
Corrected as issued on Sheets SV-C4.1, SH-C4.1, SH-C4.2, SC-C4.1, BV-C4.1, BV-C4.3 and CC-C4.1 in Addendum #2.

Question:
Storm Pipes SV-7 and SV-8 do not appear to be shown on Sheet SH-3.1. Nor do structures SV-7A or SV-8A.
Answer:
These pipes and structures occur between Structure SV-6A and SV-9B and are correctly described in the schedule on sheet SH-C3.0.

Question:

THE PARKLANDS OF FLOYDS FORK – PROJECT 3A
SOUTH BECKLEY CREEK PARK & POPE LICK PARK

There is no Pipe/Structure Chart for the Excursion Trail Pipes/Structures. The pipe sizes and lengths are shown on the ET Plan and Profile sheets, but the structure (Dry-Laid or S&F headwall) types are not given.

Answer:

All structures for Excursion Trails shall be Dry-Laid Stone type headwalls. Sheets SH-C3.0 and SC-C3.0 are being reissued as part of Addendum #2 with the pipe and structure schedules added.

Question:

A "Borrow Area" was discussed in the pre-bid meeting. Is there an estimated volume of the borrow material available from this area? If this area, as designed, does not provide the quantity of borrow necessary for the project can it be enlarged and/or is additional fill material available from the project site if needed?

Answer:

Borrow area is intended to address all project needs and may be enlarged if required.

Question:

Where chemically stabilized roadbed is required, is the treatment to be 6% lime kiln dust 16 inches deep?

Answer:

6%, 12" deep.

Question:

Typical Section #7 on Plan PR-C302 indicates chemically stabilized roadbed. Does all of the road that gets built as Typical Section #7 get chemical stabilization?

Answer:

Disregard reference to chemical stabilization for Typical Section #7.

Question:

The details on Plan ET-3.1 indicate two different details for the excursion trail construction. What portions of the trails get which detail?

Answer:

Detail 1 applies to the Excursion Trail on sheet ET-C1.11; Detail 2 applies to all other Excursion Trail segments. Sheet ET-C3.1 is being reissued as part of Addendum #2.

Question:

Bridge F-403: Drawing BR-S306 show that abutment #1 is to be setting on rock at elevation 509.95. Page BR-S303 elevation view and borings indicate that rock is much lower. Which is correct? Should abutment #1 set on rock?

Answer:

Abutment No.1 for Bridge F-403 is not required to be excavated to rock as shown on sheet BR-S306. Footing should be at Elevation 509.95 as shown on Sheet BR-S306.

Question:

Bridge F-403: Drawing BR-S309 show the bottom of the footer elevation is 509.95 for all sections. Sheet BR-S308 shows a stair step in the footer for the North Wing Wall. Which is correct?

THE PARKLANDS OF FLOYDS FORK – PROJECT 3A
SOUTH BECKLEY CREEK PARK & POPE LICK PARK

Answer:
Bridge F-403 -The footing should be stepped to the elevations shown on sheets BR-S308.

Question:
Bridge F-403: Drawing BR-S312 show a stair step in wing wall footer but no elevation is provided. Please provide elevation. Both wing walls is labeled north. Should one be labeled south?
Answer:
Bridge F-403 -The footing should be stepped to the elevations shown on sheets BR-S308.

Question:
Bridge F-404: Drawing BR-S406 show abutment#1 bottom of footer elevation at 501.417 and is setting on rock. Sheet BR-S403 show that the rock elevation is lower than elevation 501.417. Which is correct? Should abutment #1 be setting on rock?
Answer:
The Elevation view at the bottom of the sheet should be labeled South Wing Wall. The footing is to be stepped 2'-6" as shown to an elevation of 533.35.

Question:
Bridge F-404: Drawing BR-S407 show that abutment #1 bottom of footing at elevation 501.47. It also shows a stair step in the footing. Drawing BR-S409 section views show all the bottom of footers at elevation 532.5. Which is correct?
Answer:
The Bottom of footing elevation on sheet BR-S409 is incorrect. The footings should be stepped at the elevations shown on sheets BR-S407 & BR-S408.

Question:
Does the Contractor pay the Louisville Water Company fee charged for a 2-inch water meter and a 3-inch water meter at the various Trail Head Facilities, or will the owner pay direct since the meter will be in the owner's name?
Answer:
21CP will make application and pay fees for required meters.

Question:
At the Pre-Bid Conference, the owner's representative indicated that the permitting required for construction of the bridge construction should be anticipated within two months. Will additional project time be allotted if the permitting process takes longer than anticipated?
Answer:
Division of Water permit for the construction of the bridges have been received. Additional permitting as desired by the contractor related to temporary stream crossings shall be at contractors risk. No additional time shall be given for supplemental permitting.

Question:
Given that the project is a lump sum bid, will quantity underruns result in adjustment of the contract amount?
Answer:

THE PARKLANDS OF FLOYDS FORK – PROJECT 3A
SOUTH BECKLEY CREEK PARK & POPE LICK PARK

As a lump sum bid, neither quantity underruns nor overruns will result in an adjustment to the contract amount. Unit Costs provided by the contractor will only be used in the event of a change in the contracted scope of work directed and authorized by the owner.

Question:
Do typical KYDOH pavement thickness tolerances apply to the proposed pavement structures?
Answer:
Yes.

Question:
Can MSE walls be used in lieu of Segmental Retaining Walls?
Answer:
MSE will not be accepted for this project if they cannot meet the specifications in Section 323223. In addition to the technical specs, the Segmental Retaining Walls must meet the aesthetic specifications regarding pattern, module and color. Substitutions are subject to conditions outlined in Section 012500.

Question:
There appears to be areas of clearing not indicated on the demolition plans that will be required for construction of the project. Will additional payment be allowed for any clearing not detailed on the demolition plans.
Answer:
No.

Question:
Should L/W of existing Stout Road from Sta. 201+84.88 to 234+09 and Sta. 248+83.57 to 255+43.98 be anticipated? If so, what average depth?
Answer:
The intent is widen full depth and overlay with 1-1/2” of surface asphalt with no wedging.

Question:
Are any tapping fees applicable to the necessary water services? If so, is the owner or Contractor responsible for these fees?
Answer:
21CP will make application and pay fees for required meters.

Question:
Plan Sheet PR-C1.9 Keynote 4 indicates that Curb & Gutter Type A is to be constructed from Left & Right Sta. 238+15 to 239+80. Should this be right side only?
Answer:
Yes.

Question:
Will a separate irrigation meter be required from the domestic water supply meter? If so, is the owner or Contractor responsible for this charge?
Answer:
21CP will make application and pay fees for required meters.

Question:

THE PARKLANDS OF FLOYDS FORK – PROJECT 3A
SOUTH BECKLEY CREEK PARK & POPE LICK PARK

Is all required engineering, inspection, and testing provided by the Owner?
Answer:
Yes.

Question:
Will a waste area be provided for disposal of project debris?
Answer:
Soil and organic material may be disposed of on site. Other construction debris shall be removed from site and the responsibility of the contractor.

Question:
The grading finishes of the previous section seem to exceed typical highway standards. Are golf-course like finishes expected for this section?
Answer:
Yes.

Question:
Regarding the proposed Segmental Retaining Walls, Section 323223 Paragraph 3.2E indicates that "soil not meeting the required strength shall be removed and replaced with acceptable, compacted material at no additional cost to the owner". Does this indicate that any required remediation of the in-situ soils (undercut, stabilization, etc) will be the responsibility of the contractor?
Answer:
Yes.

Question:
Can a typical section for the widening on Park Road for the stations from 200+00 to 239+09 and 248+83.57 to 255+43.98 be provided?
Answer:
There is not a typical section, the widening varies from 0'to 4' throughout the length and from side to side as shown for a total of 18' from the newly established centerline.

Question:
Can the cross section for Park Road be given for the station mentioned previously for the widening sections?
Answer:
The width varies substantially throughout the length of widening a generating a representative cross section or sections is not practical.

Question:
Can profiles be provided for the water line relocations? The depths of the relocations are not given.
Answer:
Assume a standard 42" depth installation.

Question:
Is fabric wrapping the backfill required for the pipe?
Answer:
Yes, per KYTC spec 701.03.06 for all pipes under Park Road. No for all other installations.

THE PARKLANDS OF FLOYDS FORK – PROJECT 3A
SOUTH BECKLEY CREEK PARK & POPE LICK PARK

Question:
Is the design of the foundations for the retaining walls the contractors responsibility or will these be provided?
Answer:
Contractor is responsible for the foundations design for all segmental retaining walls.

Question:
If undercutting is required for the foundations for the retaining walls due to poor native soils, will the contractor be compensated for this removal and replacement?
Answer:
No.

THE PARKLANDS OF FLOYDS FORK – PROJECT 4A
THE STRAND, TURKEY RUN PARK & BROAD RUN PARK

033001- Cast-In-Place Concrete for Bridge Structures and Slabs.....033001-1 thru 1
033002- Mass Concrete for Bridge Structures.....033002-1 thru 3
033300- Architectural Concrete.....033300-1 thru 11

DIVISION 04 – MASONRY
044200- Exterior Stone Cladding.....044200-1 thru 17
044300- Stone Masonry and Limestone Benches.....044300-1 thru 15
044301- Rock Fence.....044301-1 thru 4
044302- Dry Laid Stone Headwalls and Endwalls.....044302-1 thru 3
047200- Cast Stone..... 047200-1 thru 7

DIVISION 05 – METALS
051200- Structural Steel Framing.....051200-1 thru 1
051201- Structural Strand Cables.....051201-1 thru 4
051202- Wire Rope Mesh Posts.....051202-1 thru 4
051203- Cyclone Mesh.....051203-1 thru 3
051204- Elastomeric Pads.....051204-1 thru 3
055213- Pipe and Tube Railings.....055213-1 thru 7
057300- Decorative Metal Railings.....057300-1 thru 7

DIVISION 06 - WOOD, PLASTICS, AND COMPOSITES
061063- Exterior Rough Carpentry..... 061063-1 thru 5
061540- Wood Bridge Decking..... 061540-1 thru 3
061600- Sheathing..... 061600-1 thru 4
061801- Glulam Structural Timber Systems..... 061801-1 thru 4
062013- Exterior Finish Carpentry..... 062013-1 thru 6

DIVISION 07 – THERMAL AND MOISTURE PROTECTION
071416- Cold, Fluid-Applied Waterproofing.....071416-1 thru 7
071900- Water Repellents.....076100-1 thru 5
072100- Thermal Insulation.....076100-1 thru 4
075216-SBS Modified Cold Applied Membrane Roofing.....076100-1 thru 13
076100- Sheet Metal Roofing.....076100-1 thru 14
076200- Sheet Metal Flashing and Trim.....076200-1 thru 7
079200- Joint Sealants.....076200-1 thru 8

DIVISION 08 - OPENINGS
081113- Hollow Metal Doors and Frames.....081113-1 thru 7
085201- Custom-Built Wood Windows.....085201-1 thru 5
087100- Door Hardware.....085201-1 thru 11
088000- Glazing.....085201-1 thru 11

DIVISION 09 - FINISHES
099113- Exterior Painting..... ...099113-1 thru 7
099300- Staining and Transparent Finishing..... ...099300-1 thru 7
099600- High-Performance Coatings..... ...099600-1 thru 5

DIVISION 10 – SPECIALTIES
101426- Exterior Signage.....101426-1 thru 4
102800- Toilet Accessories.....102800-1 thru 5

DIVISION 20 - MECHANICAL

THE PARKLANDS OF FLOYDS FORK – PROJECT 4A
THE STRAND, TURKEY RUN PARK & BROAD RUN PARK

200200- Scope of the Mechanical Work.....200200-1 thru 2
200300- Required Shop Drawings, Etc.....200300-1 thru 3
200500- Excavation, Trenching, Backfilling & Grading.....200500-1 thru 6
201100- Sleeving, Cutting, Patching, & Repairing.....201100-1 thru 3
201300- Pipe, Pipe Fittings, & Pipe Support.....201300-1 thru 6
202100- Valves & Cocks.....202100-1 thru 2
202200- Insulation - Mechanical.....202200-1 thru 4
202300- Thermometers, Pressure Gauges & Other Monitoring Instruments.....202300-1 thru 2
202400- Identifications, Tags, Charts, Etc.....202400-1 thru 2
202500- Hangers, Clamps, Attachments, Etc.....202500-1 thru 4
203100- Testing, Balancing, Lubrication and Adjustments.....203100-1 thru 3

DIVISION 22 – Plumbing
220100- Plumbing Specialties.....220100-1 thru 5
220200- Plumbing Fixtures, Fittings and Trim.....220200-1 thru 4

DIVISION 23 – HVAC
230200- HVAC Equipment.....230200-1 thru 3
231100- Registers, Grilles and Diffusers.....231100-1 thru 1
231200- Sheet Metal.....231200-1 thru 4

DIVISION 26 - ELECTRICAL
260501- General Provisions.....260501-1 thru 18
260502- Description of Electrical System.....260502-1 thru 1
260503- Shop Drawings, Literature, Manuals, Parts Lists, and Special Tools.....260503-1 thru 3
260504- Cutting, Patching & Repairing.....260504-1 thru 2
260508- Coordination Among Trades, Systems Interfacing and
Connection of Equipment Furnished by Others.....260508-1 thru 2
260510- Scope of the Electrical Work.....260510-1 thru 1
260519- Conductors, Identifications, Splicing Devices & Connectors.....260519-1 thru 3
260526- Grounding.....260526-1 thru 3
260531- Cabinets, Outlet Boxes & Pull Boxes.....260531-1 thru 2
260533- Raceways & Fittings.....260533-1 thru 7
260544- Excavation, Trenching, Backfilling & Grading.....260544-1 thru 2
260553- Identifications.....260553-1 thru 1
262400- Electrical Distribution Equipment.....262400-1 thru 4
262726- Wiring Devices & Plates.....262726-1 thru 3
264101- Lightning Protection System.....264101-1 thru 3
264313- Surge Suppression Systems.....264313-1 thru 3
265113- Lighting.....265113-1 thru 5

DIVISION 31 – EARTHWORK
311000- Site Clearing.....311000-1 thru 3
312000- Earth Moving.....312000-1 thru 12
312001- Earth Moving for Bridges and Retaining Walls.....312001-1 thru 1
316200- Rock Anchors.....316200-1 thru 10
316216- Steel Piles.....316216-1 thru 1

DIVISION 32 – EXTERIOR IMPROVEMENTS
321216- Hot-Mix Asphalt Paving.....321216-1 thru 6
321313- Portland Cement Concrete Paving.....321313-1 thru 10

THE PARKLANDS OF FLOYDS FORK – PROJECT 4A
THE STRAND, TURKEY RUN PARK & BROAD RUN PARK

SECTION 075216 - SBS MODIFIED BITUMEN COLD APPLIED MEMBRANE ROOFING

PART 1 - GENERAL

1.1 RELATED DOCUMENTS RELATED DOCUMENTS

A. Drawings and general provisions of the Contract, including General and Supplementary Conditions and Division 01 Specification Sections, apply to this Section.

1.2 SUMMARY

A. This Section includes the following new roofing products:

1. SBS-modified bituminous membrane roofing.
2. Cover board.
3. Roof insulation.
4. Cold applied adhesive.

B. Related Sections include the following:

1. Section 061063 “Exterior Rough Carpentry.”
2. Section 061600 "Sheathing."
3. Section 075100 “Thermal Insulation.”
4. Section 076100 “Sheet Metal Roofing.”
5. Section 076200 “Sheet Metal Flashing and Trim.”
6. Section 079200 “Joint Sealants.”

1.3 DEFINITIONS

A. Roofing Terminology: Refer to ASTM D 1079 “Terminology Relating to Roofing and Waterproofing”; glossary of NRCA's "The NRCA Roofing and Waterproofing Manual"; and the Roof Consultants Institute “Glossary of Roofing Terms” for definition of terms related to roofing work in this Section.

B. Sheet Metal Terminology and Techniques: SMACNA Architectural Sheet Metal Manual.

1.4 PERFORMANCE REQUIREMENTS

A. General: Provide installed roofing membrane and base flashings that remain watertight; do not permit the passage of water; and resist specified uplift pressures, thermally induced movement, and exposure to weather without failure.

THE PARKLANDS OF FLOYDS FORK – PROJECT 4A
THE STRAND, TURKEY RUN PARK & BROAD RUN PARK

B. Material Compatibility: Provide roofing materials that are compatible with one another under conditions of service and application required, as demonstrated by roofing manufacturer based on testing and field experience.

C. Flashings: Provide base flashings, perimeter flashings, detail flashings and component materials that comply with requirements and recommendations in NRCA Roofing and Waterproofing Manual (Fourth Edition) for Construction Details and SMACNA Architectural Sheet Metal Manual (Fifth Edition) for Construction Details, as applicable.

D. Roofing System Design: Provide built-up roofing system that is identical to systems that have been successfully tested by a qualified testing and inspecting agency to resist uplift pressure calculated according to ASCE/SEI 7.

E. Jobsite Safety: Execute all operations and provide a safe work environment in accordance to OSHA standards and regulations. This requirement applies to all contractor personnel, associated subcontractors, workers in other trades, and jobsite visitors.

1. Follow all industry fire prevention guidelines for storage of materials, staging areas, roof access, and application means and methods.
2. Any applicable local fire codes supersede industry guidelines.

F. FMG Listing: Provide roofing membrane, base flashings, and component materials that comply with requirements in FMG 4450 and FMG 4470 as part of a roofing system and that are listed in FMG's “RoofNav" for Class 1 or noncombustible construction, as applicable. Identify materials with FMG markings.

1. Fire/ Windstorm Classification: Class 1A-90

1.5 SUBMITTALS

A. Product Data: For each type of product indicated.

B. Shop Drawings: For roofing system. Include plans, elevations, sections, details, and attachments to other Work.

1. Base flashings, cants, and membrane terminations.
2. Tapered insulation, including slopes.
3. Crickets, saddles, and tapered edge strips, including slopes.
4. Insulation fastening patterns.

C. Samples for Verification: For the following products:

1. Manufacturer’s standard sample size of smooth-surfaced roofing membrane sheet & flashing backer sheet.
2. Manufacturer’s standard sample size of mineral-granule-surfaced roofing membrane cap sheet and flashing sheet.
3. Manufacturer’s standard sample size of cover board.
4. Manufacturer’s standard sample size of roof insulation.

5. Manufacturer's standard sample size of walkway pad or cap sheet walkway.
6. Six fasteners or each type, length and finish used for complete roofing installation.

D. Installer Certificates: Signed by roofing system manufacturer certifying that Installer is approved, authorized, or licensed by manufacturer to install roofing system.

E. Manufacturer Certificates: Signed by roofing manufacturer certifying that roofing system complies with requirements specified in "Performance Requirements" Article.

1. Submit evidence of meeting performance requirements.

F. Qualification Data: For Installer and manufacturer.

G. Product Test Reports: Based on evaluation of comprehensive tests performed by manufacturer and witnessed by a qualified testing agency, for components of roofing system.

H. Research/Evaluation Reports: For components of roofing system.

I. Warranty: Sample copy of special roofing manufacturer's warranty stating obligations, remedies, limitations, and exclusions of warranty.

J. Maintenance Data: For roofing system to include in the maintenance manuals specified in Division 1.

1.6 QUALITY ASSURANCE

A. Installer Qualifications: A qualified firm that is approved, authorized, or licensed by roofing system manufacturer a minimum of (5 years) to install manufacturer's product and that is eligible to receive manufacturer's warranty. Fully staffed office within 100 miles of Project.

B. Manufacturer Qualifications: A qualified manufacturer that has FMG approval for roofing system identical to that used for this Project.

C. Testing Agency Qualifications: An independent testing agency with the experience and capability to conduct the testing indicated, as documented according to ASTM E 548.

D. Test Reports:

1. Roof drain and leader test or submit plumbers verification.
2. Core cut (if requested).

E. Source Limitations: Obtain all components from single source roofing manufacturer.

F. Fire-Test-Response Characteristics: Provide roofing materials with the fire-test-response characteristics indicated as determined by testing identical products per test method below by UL, FMG, or another testing and inspecting agency acceptable to authorities having jurisdiction. Materials shall be identified with appropriate markings of applicable testing and inspecting agency.

THE PARKLANDS OF FLOYDS FORK – PROJECT 4A
THE STRAND, TURKEY RUN PARK & BROAD RUN PARK

1. Exterior Fire-Test Exposure: Class A; ASTM E 108, for application and roof slopes indicated.
2. Fire-Resistance Ratings: ASTM E 119, for fire-resistance-rated roof assemblies of which roofing system is a part.

G. Preliminary Roofing Conference: Before starting roof deck construction, conduct conference at Project site. Comply with requirements for preinstallation conferences in Division 01 Section "Project Management and Coordination." Review methods and procedures related to roof deck construction and roofing system including, but not limited to, the following:

1. Meet with Owner, Architect, Owner's insurer if applicable, testing and inspecting agency representative, roofing Installer, roofing system manufacturer's representative, deck Installer, and installers whose work interfaces with or affects roofing including installers of roof accessories and roof-mounted equipment.
2. Review methods and procedures related to roofing installation, including manufacturer's written instructions.
3. Review and finalize construction schedule and verify availability of materials, Installer's personnel, equipment, and facilities needed to make progress and avoid delays.
4. Examine deck substrate conditions and finishes for compliance with requirements, including flatness and fastening.
5. Review structural loading limitations of roof deck during and after roofing.
6. Require that all complimentary trades be present at conference. Including, but not limited to; electrical, plumbing, HVAC, and framing contractors.
7. Review base flashings, special roofing details, roof drainage, roof penetrations, equipment curbs, and condition of other construction that will affect roofing system.
8. Review governing regulations and requirements for insurance and certificates if applicable.
9. Review temporary protection requirements for roofing system during and after installation.
10. Review roof observation and repair procedures after roofing installation.
11. Review existing conditions that may require notification of building Owner before proceeding.

H. Preinstallation Conference: Conduct conference at Project site. Comply with requirements in Division 01 Section "Project Management and Coordination." Review methods and procedures related to roofing system including, but not limited to, the following:

1. Meet with Owner, Architect, Owner's insurer if applicable, testing and inspecting agency representative, roofing Installer, roofing system manufacturer's representative, deck Installer, and installers whose work interfaces with or affects roofing including installers of roof accessories and roof-mounted equipment.
2. Review methods and procedures related to roofing installation, including manufacturer's written instructions.
3. Review and finalize construction schedule and verify availability of materials, Installer's personnel, equipment, and facilities needed to make progress and avoid delays.
4. Examine deck substrate conditions and finishes for compliance with requirements, including flatness and fastening.
5. Review structural loading limitations of roof deck during and after roofing.

6. Review base flashings, special roofing details, roof drainage, roof penetrations, equipment curbs, and condition of other construction that will affect roofing system.
7. Review governing regulations and requirements for insurance and certificates if applicable.
8. Review temporary protection requirements for roofing system during and after installation.
9. Review roof observation and repair procedures after roofing installation.
10. Require all trades listed in Preliminary Roofing Conference to be present.

1.7 DELIVERY, STORAGE, AND HANDLING

A. Deliver roofing materials to Project site in original containers with seals unbroken and labeled with manufacturer's name, product brand name and type, date of manufacture, and directions for storage.

B. Store liquid materials in their original undamaged containers in a clean, dry, protected location and within the temperature range required by roofing system manufacturer. Protect stored liquid material from direct sunlight.

1. Discard and legally dispose of liquid material that cannot be applied within its stated shelf life.

C. Protect roof insulation materials from physical damage and from deterioration by sunlight, moisture, soiling, and other sources. Store in a dry location. Comply with insulation manufacturer's written instructions for handling, storing, and protecting during installation.

D. Handle and store roofing materials and place equipment in a manner to avoid permanent deflection of deck.

1.8 PROJECT CONDITIONS

A. Weather Limitations: Proceed with installation only when existing and forecasted weather conditions permit roofing system to be installed according to manufacturer's written instructions and warranty requirements.

1.9 WARRANTY

A. Warranty, General: Warranties specified shall be in addition to, and run concurrent with, other warranties required by the Contract Documents. Manufacturer's disclaimers and limitations on product warranties do not relieve Contractor of obligations under requirements of the Contract Documents.

B. Special Manufacturer’s Warranty: Submit roofing system Manufacturer's No Dollar Limit standard form, in which manufacturer agrees to repair or replace components of roofing system that fail in materials or workmanship within specified warranty period. Failure includes roof leaks.

1. Special warranty includes roofing membrane, base flashings, roofing membrane accessories, roof insulation, fasteners, cover boards, walkway products, sheet metal flashings and trim, copings, roof edge flashings, roof edge drainage systems, counterflashings and reglets.
2. Warranty does not include existing building roof systems and/or alterations.
3. Warranty Period: 20 years from date of Substantial Completion.

C. Special Project Warranty: Submit roofing Installer's warranty, signed by Installer, covering Work of this Section, including all components of roofing system such as roofing membrane, base flashing, roof insulation and fasteners for the following warranty period:

1. Warranty Period: Two years from date of Substantial Completion.

PART 2 - PRODUCTS

2.1 MANUFACTURERS

A. Manufacturers: Subject to compliance with requirements, provide products by one of the following:

1. SBS Modified bitumen cold-applied membrane roofing:

a. John’s Manville
b. Firestone
c. Tremco Inc.
d. Soprema
e. GAF

2.2 SBS-MODIFIED ASPHALT-SHEET MATERIALS

A. Roofing Membrane Sheet: ASTM D 6163, Grade S, Type I, glass-fiber-reinforced, SBS-modified asphalt sheet; smooth surfaced; suitable for cold application method specified.

1. Thickness: 90mil.
2. Roll width: 1m

B. Roofing Membrane Cap Sheet: ASTM D 6164, Grade G, Type II, FR, CR, polyester-reinforced, SBS-modified asphalt sheet; granular surfaced; suitable for application method specified.

1. Thickness: 160mil
2. Roll width: 1 m
3. Granule color: Bright white, CR Rated (SRI 89min)

THE PARKLANDS OF FLOYDS FORK – PROJECT 4A
THE STRAND, TURKEY RUN PARK & BROAD RUN PARK

2.3 BASE FLASHING SHEET MATERIALS

A. Backer Sheet: ASTM D 6163, Grade S, Type I, glass-fiber-reinforced, SBS-modified asphalt sheet; smooth surfaced; suitable for application method specified. Same requirements as membrane.

B. Flashing Sheet: ASTM D 6298, embossed aluminum foil surfaced, glass-fiber-reinforced], SBS-modified asphalt sheet; granular surfaced; suitable for application method specified.

C. Liquid Applied Flashing: A liquid and fabric reinforced flashing system created with a stitchbonded polyester scrim and a two-component, moisture cured, elastomeric, liquid applied flashing material, consisting of an asphalt extended urethane base material and an activator.

2.4 AUXILIARY ROOFING MEMBRANE MATERIALS

A. General: Auxiliary materials recommended by roofing system manufacturer for intended use and compatible with roofing membrane.

B. Cold-Applied Adhesive: Roofing system manufacturer's asphalt-based, asbestos-free, cold-applied adhesive specially formulated for compatibility and use with membrane applications.

C. Cold-Applied Flashing Adhesive: Roofing system manufacturer's asphalt-based, two-component, asbestos-free, trowel-grade, cold-applied adhesive specially formulated for compatibility and use with flashing applications.

D. Mastic Sealant: Polyisobutylene, plain or modified bitumen, nonhardening, nonmigrating, nonskinning, and nondrying.

E. Fasteners: Factory-coated steel fasteners and metal or plastic plates meeting corrosion-resistance provisions in FMG 4470, designed for fastening roofing membrane components to substrate, tested by manufacturer for required pullout strength, and provided by the roofing system manufacturer.

F. Expansion Joints: Provide factory fabricated weatherproof, exterior covers for expansion joint openings consisting of flexible rubber membrane, supported by a closed cell foam to form flexible bellows, with two metal flanges, adhesively and mechanically combined to the bellows by a patented bifurcation process. Provide product manufactured and marketed by single-source membrane supplier that is included in the No Dollar Limit guarantee.

G. Metal Flashing Sheet: Metal flashing sheet is specified in Division 7 Section "Sheet Metal Flashing and Trim." Pre-painted steel sheet metal components must be provided by manufacturer issuing the roof system warranty.

H. Roofing Granules: Ceramic-coated roofing granules matching specified cap sheet, provided by roofing system manufacturer.

I. Miscellaneous Accessories: Provide all miscellaneous accessories recommended by roofing system manufacturer.

2.5 WALKWAYS

A. Walkway Pads: Mineral-granule-surfaced, reinforced modified asphalt composition, slip-resisting pads, manufactured as a traffic pad for foot traffic provided by roofing system manufacturer, with a pad size of 32 inch x 32 inch.

2.6 COVER BOARD

A. Perlite Board: ASTM C 728; composed of expanded perlite, cellulosic fibers, binders and waterproofing agents with top surface seal-coated. Product: ½" DuraBoard or ½" Securerock or equal product compatible with roof system.

2.7 ROOF INSULATION

A. General: Provide preformed roof insulation boards that comply with requirements and referenced standards, selected from manufacturer's standard sizes and of thicknesses indicated.

B. Polyisocyanurate Board Insulation: ASTM C 1289, Type II, Class 1, Grade 2.

1. Provide insulation package to provide a total R value as indicated on drawings. Min R value of 12.

2.8 TAPERED INSULATION

A. Tapered Insulation: ASTM C 1289, provide factory-tapered insulation boards fabricated to slope of 1/4 inch per 12 inches , unless otherwise indicated. Minimum 2" thick.

2.9 INSULATION ACCESSORIES

A. General: Roof insulation accessories recommended by insulation manufacturer for intended use and compatible with membrane roofing.

B. Provide factory preformed saddles, crickets, tapered edge strips, and other insulation shapes where indicated for sloping to drain. Fabricate to slopes indicated.

C. Fasteners: Factory-coated steel fasteners and metal or plastic plates meeting corrosion-resistance provisions in FMG 4470, designed for fastening roof insulation to substrate, and provided by roofing system manufacturer.

THE PARKLANDS OF FLOYDS FORK – PROJECT 4A
THE STRAND, TURKEY RUN PARK & BROAD RUN PARK

D. Urethane Adhesive: Manufacturer's two component urethane adhesive formulated to adhere insulation to substrate.

E. Insulation Cant Strips: ASTM C 728, perlite insulation board.

F. Wood Nailer Strips: Comply with requirements in Division 06 Section "Miscellaneous Rough Carpentry."

PART 3 - EXECUTION

3.1 EXAMINATION

A. Examine substrates, areas, and conditions, with Installer present, for compliance with the following requirements and other conditions affecting performance of roofing system:

1. Verify that roof openings and penetrations are in place and set and braced and that roof drains are securely clamped in place.
2. Verify that wood cants, blocking, curbs, and nailers are securely anchored to roof deck at penetrations and terminations and that nailers match thicknesses of insulation.
3. Verify that surface plane flatness and fastening of roof rafters complies with requirements in Division 06 "Sheathing."

B. Proceed with installation only after unsatisfactory conditions have been corrected.

3.2 PREPARATION

A. Clean substrate of dust, debris, moisture, and other substances detrimental to roofing installation according to roofing system manufacturer's written instructions. Remove sharp projections.

B. Prevent materials from entering and clogging roof drains and conductors and from spilling or migrating onto surfaces of other construction. Remove roof-drain plugs when no work is taking place or when rain is forecast.

1. Proceed with installation only after unsatisfactory conditions have been corrected.

3.3 INSULATION AND COVER BOARD INSTALLATION

A. Coordinate installing roof system components so insulation and cover board is not exposed to precipitation or left exposed at the end of the workday.

B. Comply with roofing system manufacturer's written instructions for installing roof insulation and cover board.

C. Insulation Cant Strips: Install and secure preformed 45-degree insulation cant strips at junctures of roofing membrane system with vertical surfaces or angle changes greater than 45 degrees per manufacturer's instruction.

D. Install tapered insulation under area of roofing to conform to slopes indicated.

E. Install boards with long joints in a continuous straight line with end joints staggered between rows, abutting edges and ends between boards. Fill gaps exceeding 1/4 inch with like material.

1. Cut and fit boards within 1/4 inch of nailers, projections, and penetrations.

F. Install one or more layers of insulation under area of roofing to achieve required thickness. Where overall thickness is 1.5 inches or greater, install 2 or more layers with joints of each succeeding layer staggered from joints of previous layer a minimum of 6 inches in each direction.

G. Trim surface of boards where necessary at roof drains so completed surface is flush and does not restrict flow of water.

H. Install tapered edge strips at perimeter edges of roof that do not terminate at vertical surfaces.

I. Mechanically Fastened with Subsequent Layers Adhered Insulation and Cover Board: Secure first layer of insulation to deck using mechanical fasteners specifically designed and sized for fastening specified board-type to deck type.

1. Fasten first layer to resist uplift pressure at corners, perimeter, and field of roof.

2. Install subsequent layers in a two-part urethane adhesive.

J. Proceed with installation only after unsatisfactory conditions have been corrected.

3.4 ROOFING MEMBRANE INSTALLATION, GENERAL

A. Install cold-applied roofing system according to roofing system manufacturer's written instructions, applicable recommendations and requirements of this Section.

B. Apply bonding adhesive only when weather conditions and ambient temperatures are suitable.

C. Start installation of roofing membrane in presence of roofing system manufacturer's technical personnel.

D. Where roof slope exceeds 1/2 inch per 12 inches (1:24) contact the membrane manufacturer for installation instructions regarding installation direction and backnailing

E. Cooperate with testing and inspecting agencies engaged or required to perform services for installing roofing system.

F. Coordinate installing roofing system so insulation and other components of the roofing membrane system not permanently exposed are not subjected to precipitation or left uncovered at the end of the workday or when rain is imminent.

1. Provide tie-offs at end of each day's work to cover exposed roofing membrane sheets and insulation with a course of coated felt set in roofing cement or hot roofing asphalt with joints and edges sealed.
2. Complete terminations and base flashings and provide temporary seals to prevent water from entering completed sections of roofing system.
3. Remove and discard temporary seals before beginning work on adjoining roofing.

G. Substrate-Joint Penetrations: Prevent roofing asphalt from penetrating substrate joints, entering building, or damaging roofing system components or adjacent building construction.

H. Proceed with installation only after unsatisfactory conditions have been corrected.

3.5 SBS-MODIFIED BITUMINOUS MEMBRANE INSTALLATION

A. Install modified bituminous roofing membrane sheet and cap sheet according to roofing manufacturer's written instructions, starting at low point of roofing system. Extend roofing membrane sheets over and terminate beyond cants, installing as follows:

1. Adhere to substrate in cold-applied adhesive.
2. Unroll roofing membrane sheets and allow them to relax for minimum time period required by manufacturer.

B. Laps: Accurately align roofing membrane sheets, without stretching, and maintain uniform side and end laps. Stagger end laps. Completely bond and seal laps with Adhesive or by Hot air welding, leaving no voids.

1. Repair tears and voids in laps and lapped seams not completely sealed.
2. Apply matching granules or white acrylic coating to cover exuded bead at laps.

C. Install roofing membrane sheets so side and end laps shed water.

D. Proceed with installation only after unsatisfactory conditions have been corrected.

E. Complete the entire membrane installation without undue delay.

3.6 FLASHING AND STRIPPING INSTALLATION

A. Install base flashing over cant strips and other sloping and vertical surfaces, at roof edges, and at penetrations through roof, and secure to substrates according to roofing system manufacturer's written instructions and as follows:

1. Prime substrates with asphalt primer if required by roofing system manufacturer.

2. Backer Sheet Application: Install backer sheet and adhere to substrate in MBR Flashing Adhesive at rate required by roofing system manufacturer.
3. Flashing Sheet Application: Adhere flashing sheet to substrate in MBR Flashing Adhesive at rate required by roofing system manufacturer.

B. Extend base flashing up walls or parapets a minimum of 8 inches above roofing membrane and 4 inches onto field of roofing membrane.

C. Mechanically fasten top of base flashing securely at terminations and perimeter of roofing with term bar and fastened every 6”.

1. Seal top termination of base flashing with a strip of glass-fiber fabric set in MBR Flashing cement.

D. Proceed with installation only after unsatisfactory conditions have been corrected.

3.7 WALKWAY INSTALLATION

A. Walkway Pads: Install walkway pads using units of size indicated or, if not indicated, of manufacturer's standard size according to walkway pad manufacturer's written instructions.

1. Set walkway pads in cold-applied adhesive.

B. Walkway Cap Sheet Strips: Install roofing membrane walkway cap sheet strips over roofing membrane in cold-applied adhesive.

C. Proceed with installation only after unsatisfactory conditions have been corrected.

3.8 FIELD QUALITY CONTROL

A. Testing Agency: Owner will engage a qualified independent testing and inspecting agency to perform roof tests and inspections and to prepare test reports.

B. Final Roof Inspection: Arrange for roofing system manufacturer's technical personnel to inspect roofing installation on completion and submit report to Architect.

1. Notify Architect or Owner 48 hours in advance of date and time of inspection.

C. Repair or remove and replace components of roofing system where test results or inspections indicate that they do not comply with specified requirements.

D. Additional testing and inspecting, at Contractor's expense, will be performed to determine compliance of replaced or additional work with specified requirements.

THE PARKLANDS OF FLOYDS FORK – PROJECT 4A
THE STRAND, TURKEY RUN PARK & BROAD RUN PARK

3.9 PROTECTING AND CLEANING

A. Protect roofing system from damage and wear during remainder of construction period. When remaining construction will not affect or endanger roofing, inspect roofing for deterioration and damage, describing its nature and extent in a written report, with copies to Architect and Owner.

B. Correct deficiencies in or remove roofing system that does not comply with requirements, repair substrates, and repair or reinstall roofing system to a condition free of damage and deterioration at time of Substantial Completion and according to warranty requirements.

C. Clean overspray and spillage from adjacent construction using cleaning agents and procedures recommended by manufacturer of affected construction.

END OF SECTION 075216

THE PARKLANDS OF FLOYDS FORK – PROJECT 4A
THE STRAND, TURKEY RUN PARK & BROAD RUN PARK

SECTION 264101 – LIGHTNING PROTECTION SYSTEM

1.1 General:

A. The Contractor shall provide and install a complete Lightning Protection System for the Silo Center 4-Hole Trailhead Building and the Sugar Hill Kiosk. This specification addresses the requirements of Lightning Protection Systems for buildings only.

B. Compliance Requirements
   1. System Design: NFPA 780, latest edition.
   2. Component Design: UL 96 Standard, latest edition, L.P.I. 175.
   3. Certification: Lightning Protection Institute Certified System and Underwriters' Laboratories 96A Master Label, Lightning Protection Institute certification.

C. Submittals
   1. Complete Shop Drawings
      a) Layout
      b) Details
   2. Catalog Data with complete description of material components.

1.2 Product:

A. Manufacturer: ERITECH Lightning Protection/Grounding a division of ERICO Inc. phone: (800) 248-9353. E-mail: application_eng@erico.com

B. Prior approved manufacturer, who is a Lightning Protection Institute Member in good standing.

C. Materials are to be listed and labeled in accordance with Underwriters' Laboratories 96A requirements.

1.3 System Design:

A. System to be designed and installed by a L.P.I. Certified Master Installer/Designer in good standing with the Lightning Protection Institute.

B. System to consist of groundings, down conductors, air terminals, interconnecting conductors and bonding, designed to appear as a part of the building.

C. Design to be complete per current NFPA 780 requirements.
   1. Class II Aluminum materials required.
   2. Class II Copper materials required.
   3. Aluminum Lightning Protection materials not to be embedded in concrete or masonry or installed on or below copper surfaces.
   4. Copper Lightning Protection materials not to be installed on aluminum surfaces.
   5. Grounding shall be suitable for the soil conditions per NFPA 780, this may include:
      a) Ground loop only (full size cable) 2/0 buried 18 in. deep.
      b) Ground loop combined with ¾ x 10 ft. rods buried 18 in. deep.
   6. Strike termination devices (air terminals) required as follows, unless the area in question is located under a zone of protection.
      a) Minimum 10 in. projection above the object projected.
      b) Maximum 20 ft. spacing on roof ridges or edges.

THE PARKLANDS OF FLOYDS FORK – PROJECT 4A
THE STRAND, TURKEY RUN PARK & BROAD RUN PARK

c) Maximum 24 in. distance from ridge ends or roof edges & outside corners.
d) Penthouses, Protrusions and Mechanical roof top equipment, same guidelines.
e) Strike termination devices required on eaves of sloping roofs, when the eave is over 50 ft. in height.
f) Mid-roof areas are to be provided with Strike termination devices at either 50 ft. spacing or provided with Strike termination devices of sufficient quantity & height, to ensure the entire roof area is covered by a "zone of protection" as afforded by a 150 ft. radius sphere (per NFPA 780).
g) Strike termination safety devices to be provided in mid-roof areas and high traffic areas. Material to be the same as, or an alloy of, the point and base and to be one of the following:
1) Safety tipped point

7. Bonding is required in strict accordance with NFPA 780
a) Ground level potential equalization; below the 12 ft. elevation of the structure all grounded media to be interconnected.
b) Ground loop required for structures 60 ft. in height.
c) Lightning surge suppressors to be provided on electrical and communication service entrances and on communication antenna lead-ins.

1.4 Installation:

A. L.P.I. Certified Master Installer required with a minimum of five (5) years of experience.
B. Complete per requirements of NFPA 780.
C. Neat and inconspicuous manner.
D. All mounting & penetration of roof surface shall be coordinated with roofing contractor to assure maximum roofing guarantee.
E. All through-roof penetration flashings to be furnished, sealed and guaranteed by the roofing contractor.
F. Any visible cable to be in painted conduit to match adjacent material.
G. Fasteners:
1. At 3 ft. centers, maximum, on exposed conductor runs.
2. As necessary to maintain position and hold permanently in place on concealed runs of conductor.

1.5 Final Acceptance:

A. Procurement of L.P.I. Certification includes jobsite verification and completion of:
1. Witness of Grounding System & Grade bonding (Stage I)
2. Inspection of concealed equipment between roof & grade (Stage II)
3. Final inspection of exposed equipment on roof (Stage III)
B. Procurement of Underwriters' Laboratories Master Label indicating completion of;
1. Show owner or his representative the type and manner of placing groundings and receiving his record of review.

THE PARKLANDS OF FLOYDS FORK – PROJECT 4A
THE STRAND, TURKEY RUN PARK & BROAD RUN PARK

2. Completion of application form and submission to Underwriters' Laboratories for issuance of certification.

C. Installation of Installer's Nameplate at location designated on UL application form.

D. Any components or methods found to be not in accordance with this specification shall be repaired or replaced without cost to the owner.

1.6 Special consideration:

If this contract includes the construction of a building or buildings that are physically connected to an existing building or are additions to existing structures, then the Lightning Protection System(s) for the new construction shall comply with the standards stated above. The delivery of the L.P.I. Certification and the Underwriters' Laboratories Master Label shall not be required. In place of this certification or label the procedures of each program shall be followed to deliver partial or qualified certification outlined by either organization.